97 DEC -5 PM 12:45
LOS ANGELES REGION

Semi-Annual Data Report for July 1997 Groundwater Sampling and Analysis at the Calmar Facility City of Industry, California

December 3, 1997
2455.01-102

Prepared for
California Regional Water Quality Control Board
Los Angeles Region
101 Centre Plaza Drive
Monterey Park, California 91754

Levine·Fricke·Recon
ENGINEERS, HYDROGEOLOGISTS & APPLIED SCIENTISTS

Printed on recycled paper

CONTENTS

CERTIFICATION III

1.0 INTRODUCTION 1

2.0 SCOPE OF WORK 1

3.0 GROUNDWATER ELEVATION AND FLOW DIRECTION 1

4.0 ANALYTICAL RESULTS FOR GROUNDWATER SAMPLING 1

TABLES

1 Summary of Groundwater Elevation Data

2 Summary of Groundwater Quality Data

FIGURES

1 Site Vicinity

2 Groundwater Elevation Contours: July 1997

3 Summary of VOCs Detected in Groundwater: July 1997

APPENDICES

A Levine·Fricke·Recon Field Protocols

B Laboratory Certificates and Chain-of-Custody Documentation

CERTIFICATION

All hydrogeologic and geologic information, conclusions, and recommendations in this document have been prepared under the supervision of and reviewed by a Levine·Fricke·Recon California Registered Geologist.

Martin E. Hamann, R.G., C.H.G.
Senior Hydrogeologist
California Registered Geologist (5482)
Certified Hydrogeologist (203)

REGISTERED GEOLOGIST
MARTIN E. HAMANN
No. 203
CERTIFIED HYDROGEOLOGIST
STATE OF CALIFORNIA

Dec 3, 1997
Date

* A registered geologist's certification of conditions comprises a declaration of his professional judgment. It does not constitute a warranty or guarantee, expressed or implied, nor does it relieve any other party of its responsibility to abide by contract documents, applicable codes, standards, regulations, and ordinances.

1.0 INTRODUCTION

At the request of the California Regional Water Quality Control Board, Los Angeles Region (RWQCB), Calmar, Inc., is currently conducting semi-annual groundwater monitoring at its facility located at 333 South Turnbull Canyon Road in the City of Industry, Los Angeles County, California ("the Site"; Figure 1). On behalf of Calmar, Levine·Fricke·Recon Inc. (LFR) has prepared this data report to summarize the results of the groundwater sampling conducted at the Site on July 8, 1997.

2.0 SCOPE OF WORK

LFR performed the following work at the Site:

- Depth-to-groundwater measurements (monitoring wells MW-1 through MW-7, and piezometers P-1 and P-2) on July 8, 1997
- Monitoring well development and groundwater sampling

LFR's field protocols and groundwater sampling procedures are presented in Appendix A.

3.0 GROUNDWATER ELEVATION AND FLOW DIRECTION

Depth to groundwater measurements, along with historical groundwater elevation data collected at the Site, are summarized in Table 1. Groundwater elevation data from July 8, 1997, were used to construct a groundwater elevation contour map for the Site (Figure 2). Groundwater at the Site appeared to be northerly trending with some mounding in the western portion of the Site.

The groundwater elevations measured in July 1997 all appeared to be lower than those measured during previous monitoring events. Monitoring well MW-3 dropped the most, approximately 1.3 feet, with the rest of the wells averaging approximately 0.6 to 0.8 foot. These decreases are probably due to seasonal fluctuations rather than representing a continued trend.

4.0 ANALYTICAL RESULTS FOR GROUNDWATER SAMPLING

Groundwater samples collected in July 1997 were submitted to VOC Analytical Laboratories Inc., of Anaheim, California. All samples were submitted under chain-of-custody documentation for analysis of halogenated organic compounds using EPA Method 8010.

Analytical results for groundwater samples collected on July 8, 1997, are summarized in Table 2 and Figure 3.

In general, volatile organic compound (VOC) concentrations in all on-site monitoring wells are relatively stable, with the exception of well MW-6. This off-site and hydraulically upgradient well has shown an increase in trichloroethene (TCE) from the last sampling event (January 1997).

Table 1 :
SUMMARY OF GROUNDWATER ELEVATION DATA
Calmar - City of Industry
LFR 2455.01

Well Number	Well Elevation (feet-MSL)	Date Sampled	Depth to Water (feet)	Groundwater Elevation (feet-MSL)	Relative Change (feet)
MW-1	303.32	3/29/89	35.84	267.48	--
		4/29/91	42.65	260.67	-6.81
		5/10/91	42.72	260.60	-0.07
		7/30/91	43.52	259.80	-0.80
		10/11/91	44.24	259.08	-0.72
		3/25/92	43.77	259.55	0.47
	303.16 *	4/15/93	37.01	266.15	6.60
		7/30/93	34.62	268.54	2.39
		11/30/93	32.92	270.24	1.70
		4/28/94	31.11	272.05	1.81
		7/27/94	30.89	272.27	0.22
		10/6/94	31.31	271.85	-0.42
		1/26/95	30.97	272.19	0.34
		3/28/95	29.77	273.39	1.20
		1/25/96	27.54	275.62	2.23
		7/23/96	27.67	275.49	-0.13
		1/17/97	27.67	275.49	0.00
		7/8/97	28.29	274.87	-0.62
MW-2	303.29	3/29/89	35.14	268.15	--
		4/29/91	41.38	261.91	-6.24
		5/10/91	41.45	261.84	-0.07
		7/30/91	42.12	261.17	-0.67
		10/11/91	42.67	260.62	-0.55
		3/25/92	42.21	261.08	0.46
	303.15 *	4/15/93	36.10	267.05	5.97
		7/30/93	33.86	269.29	2.24
		11/30/93	32.22	270.93	1.64
		4/28/94	30.42	272.73	1.80
		7/27/94	30.21	272.94	0.21
		10/6/94	30.65	272.50	-0.44
		1/26/95	30.29	272.86	0.36
		3/28/95	29.09	274.06	1.20
		1/25/96	26.77	276.38	2.32
		7/23/96	26.90	276.25	-0.13
		1/17/97	26.84	276.31	0.06
		7/8/97	27.47	275.68	-0.63
MW-3	302.67	3/29/89	35.01	267.66	--
		4/29/91	41.67	261.00	-6.66
		5/10/91	41.72	260.95	-0.05
		7/30/91	42.50	260.17	-0.78
		10/11/91	43.11	259.56	-0.61
		3/25/92	42.50	260.17	0.61

Table 1 :
SUMMARY OF GROUNDWATER ELEVATION DATA
Calmar - City of Industry
LFR 2455.01

Well Number	Well Elevation (feet-MSL)	Date Sampled	Depth to Water (feet)	Groundwater Elevation (feet-MSL)	Relative Change (feet)
MW-3	302.36 *	4/15/93	35.92	266.44	6.27
		7/30/93	33.71	268.65	2.21
		11/30/93	NA	--	--
		4/28/94	30.11	272.25	3.60
		7/27/94	29.92	272.44	0.19
		10/6/94	30.34	272.02	-0.42
		1/26/95	29.46	272.90	0.88
		3/28/95	28.43	273.93	1.03
		1/25/96	26.34	276.02	2.09
		7/23/96	26.07	276.29	0.27
		1/17/97	25.28	277.08	0.79
		7/8/97	26.57	275.79	-1.29
MW-4	304.78	4/15/93	35.85	268.93	--
		7/30/93	33.96	270.82	1.89
		11/30/93	32.46	272.32	1.50
		4/28/94	30.76	274.02	1.70
		7/27/94	30.56	274.22	0.20
		10/6/94	31.01	273.77	-0.45
		1/26/95	30.61	274.17	0.40
		3/28/95	29.41	275.37	1.20
		1/25/96	27.42	277.36	1.99
		7/23/96	27.52	277.26	-0.10
		1/17/97	27.45	277.33	0.07
		7/8/97	28.06	276.72	-0.61
MW-5	304.09	4/15/93	34.09	270.00	--
		7/30/93	32.31	271.78	1.78
		11/30/93	30.9	273.19	1.41
		4/28/94	29.27	274.82	1.63
		7/27/94	29.04	275.05	0.23
		10/6/94	29.46	274.63	-0.42
		1/26/95	28.98	275.11	0.48
		3/28/95	27.8	276.29	1.18
		1/25/96	25.97	278.12	1.83
		7/23/96	26.03	278.06	-0.06
		1/17/97	25.88	278.21	0.15
		7/8/97	Well Inaccessible		
MW-6	303.50	7/30/93	33.87	269.63	--
		11/30/93	32.37	271.13	1.50
		4/28/94	30.59	272.91	1.78
		7/27/94	30.35	273.15	0.24
		10/6/94	30.75	272.75	-0.40
		1/26/95	30.42	273.08	0.33
		3/28/95	29.21	274.29	1.21

Table 1 :
SUMMARY OF GROUNDWATER ELEVATION DATA
Calmar - City of Industry
LFR 2455.01

Well Number	Well Elevation (feet-MSL)	Date Sampled	Depth to Water (feet)	Groundwater Elevation (feet-MSL)	Relative Change (feet)
MW-6	303.50	1/25/96	27.09	276.41	2.12
		7/23/96	27.21	276.29	-0.12
		1/17/97	27.15	276.35	0.06
		7/8/97	27.78	275.72	-0.63
MW-7	303.04	7/30/93	34.00	269.04	--
		11/30/93	32.24	270.80	1.76
		4/28/94	30.43	272.61	1.81
		7/27/94	30.20	272.84	0.23
		10/6/94	30.61	272.43	-0.41
		1/26/95	30.78	272.26	-0.17
		3/28/95	29.05	273.99	1.73
		1/25/96	26.90	276.14	2.15
		7/23/96	27.05	275.99	-0.15
		1/17/97	26.97	276.07	0.08
		7/8/97	27.62	275.42	-0.65
P-1	301.99	3/29/89	34.06	267.93	--
		4/29/91	40.59	261.40	-6.53
		5/10/91	40.66	261.33	-0.07
		7/30/91	41.40	260.59	-0.74
		10/11/91	41.95	260.04	-0.55
		3/25/92	41.16	260.83	0.79
	301.65 *	4/15/93	34.94	266.71	5.88
		7/30/93	32.76	268.89	2.18
		11/30/93	NA	--	--
		4/28/94	29.11	272.54	3.65
		7/27/94	29.04	272.61	0.07
		10/6/94	29.05	272.60	-0.01
		1/26/95	28.53	273.12	0.52
		3/28/95	27.78	273.87	0.75
		1/25/96	26.02	275.63	1.76
		7/23/96	26.11	275.54	-0.09
		1/17/97	NA	--	--
		7/8/97	26.67	274.98	-0.56
P-2	303.09	3/29/89	35.14	267.95	--
		4/29/91	42.04	261.05	-6.90
		5/10/91	40.10	262.99	1.94
		7/30/91	42.82	260.27	-2.72
		10/11/91	43.43	259.66	-0.61
		3/25/92	43.01	260.08	0.42
		4/15/93	36.58	266.51	6.43
		7/30/93	34.25	268.84	2.33
		11/30/93	32.59	270.50	1.66
		4/28/94	30.78	272.31	1.81

Table 1 :
SUMMARY OF GROUNDWATER ELEVATION DATA
Calmar - City of Industry
LFR 2455.01

Well Number	Well Elevation (feet-MSL)	Date Sampled	Depth to Water (feet)	Groundwater Elevation (feet-MSL)	Relative Change (feet)
P-2	303.09	7/27/94	30.52	272.57	0.26
		10/6/94	30.94	272.15	-0.42
		1/26/95	30.62	272.47	0.32
		3/28/95	29.43	273.66	1.19
		1/25/96	27.18	275.91	2.25
		7/23/96	27.31	275.78	-0.13
		1/17/97	27.30	275.79	0.01
		7/8/97	27.91	275.18	-0.61
P-3	305.11	3/29/89	36.59	268.52	--
		4/29/91	40.59	264.52	-4.00
		5/10/91	40.68	264.43	-0.09
		7/30/91	41.86	263.25	-1.18
		10/11/91	42.07	263.04	-0.21
		3/25/92	41.21	263.90	0.86
	305.01 *	4/15/93	35.12	269.89	5.99
		7/30/93	33.96	271.05	1.16
		11/30/93	32.12	272.89	1.84
		4/28/94	30.48	274.53	1.64
		7/27/94	30.33	274.68	0.15
		10/6/94	30.76	274.25	-0.43
		1/26/95	30.04	274.97	0.72
		3/28/95	28.62	276.39	1.42
		1/25/96	26.64	278.37	1.98
		7/23/96	26.66	278.35	-0.02
		1/17/97	26.23	278.78	0.43
		7/8/97	27.08	277.93	-0.85

NOTES:

MSL = Mean Sea Level
* = Resurveyed after top of casing trimmed in April 1993.
NA = No access (area flooded).

QA/QC: AID

Table 2 :
SUMMARY OF DETECTED
VOCs (EPA Method 8010/601) and BTEX (EPA Method 8020/602) IN GROUNDWATER SAMPLES

Calmar - City of Industry

LFR 2455.01

All concentrations reported in micrograms per liter (µg/L)

Well Number	Date Sampled	PCE	TCE	1,1-DCE	1,1-DCA	cis-1,2-DCE	1,2-DCA	1,1,1-TCA	Benzene	Toluene	Ethylbenzene	Xylene	Freon 113	Vinyl Chloride	Trans-1,2-DCE	Other Compounds
MW-1	9/1/88 *	20	23	6.1	ND	TR	ND	6.5	TR	TR	<0.5	TR	NR	NR	NR	
	4/29/91 **	34	34	19	ND	2.9	ND	4.5	<1.0	<1.0	<1.0	<1.0	NR	<0.5	ND	
	10/11/91	32	27	16.0	ND	2	ND	3	<1.0	<1.0	<1.0	<1.0	NR	<5.0	<1.0	Methylene chloride 1.0***; Freon-TF 44.0
	3/25/92	12	16	4.4	ND	1.7	<0.5	0.9	<0.5	<0.5	<0.5	<0.5	NR	<0.5	<0.5	
	4/16/93	18	15	11	<1.0	<1.0	<1.0	2.0	<1.0	1.7	<1.0	<1.0	NR	<1.0	<1.0	
	8/3/93	13	ND	7	ND	ND	<1.0	1.4	<1.0	<1.0	<1.0	<1.0	NR	<1.0	<1.0	Chloromethene 18.0
	11/30/93	12.0	8.0	3.5	<1.0	<1.0	<1.0	1.5	NA	NA	NA	NA	NR	<1.0	ND	
	3/28/94	18	9.9	5.2	<1.0	<1.0	<1.0	2.6	NA	NA	NA	NA	NR	<1.0	ND	
	6/21/94	14	6.2	3.4	<1.0	<1.0	<1.0	1.7	NA	NA	NA	NA	NR	<1.0	ND	
	10/6/94	13	6	2.7	<1.0	<1.0	<1.0	1.8	<1.0	<1.0	<1.0	<1.0	NR	<1.0	<1.0	
	10/6/94 (D)	13	5.7	2.6	<1.0	<1.0	<1.0	1.8	<1.0	<1.0	<1.0	<1.0	NR	<1.0	<1.0	
	1/26/95	13	6.1	1.5	<1.0	<1.0	<1.0	<1.0	NA	NA	NA	NA	NR	<1.0	<1.0	
	3/28/95	12	5.9	1.6	<1.0	<1.0	<1.0	<1.0	NA	NA	NA	NA	NR	<0.22	<0.9	Chloroform 0.35; Dichloromethane 2.5
	3/28/95 (D)	9	3.5	4.4	<1.0	<1.0	<1.0	<1.0	NA	NA	NA	NA	NR	<0.22	<0.9	Chloroform 0.14; Dichloromethane 1.8
	1/26/96	12	4.5	2.1	<1.0	<1.0	<1.0	<1.0	NA	NA	NA	NA	NR	<1.0	<1.0	
	7/24/96	8.7	2.8	0.79	<0.5	<0.5	<0.5	<0.5	NA	NA	NA	NA	3.4	<0.5	<0.5	
	7/24/96 (D)	9.3	3.1 –	0.86	<0.5	<0.5	<0.5	<0.5	NA	NA	NA	NA	3.7	<0.5	<0.5	
	1/16/97	7.4	3.3	<0.5	<0.5	<0.5	<0.5	<0.5	NA	NA	NA	NA	3.8	<0.5	<0.5	
	7/8/97	8.2	3.2	<0.5	<0.5	1.1	<0.5	<0.5	NA	NA	NA	NA	6.8	<0.5	<0.5	
MW-2	9/1/88 *	7	42	4	ND	1.9	ND	0.77	<0.5	<0.5	<0.5	<0.5	NR	NR	NA	
	4/29/91 **	11	140	52	5.4	2.2	ND	73	<1.0	<1.0	<1.0	<1.0	NR	<0.5	NA	
	10/11/91	13	5	2	ND	ND	ND	ND	<1.0	<1.0	<1.0	<1.0	NR	<5.0	<1.0	Freon-TF 15.0
	3/25/92	7.2	84	20	2.5	2	<1.0	33	<0.5	<0.5	<0.5	<0.5	NR	<1.0	<1.0	
	4/15/93	8.2	250	96	20	3.9	<1.0	98	<1.0	<1.0	<1.0	<1.0	NR	<1.0	<1.0	
	8/2/93	4.7	110	49	9.2	1.6	<1.0	34	<1.0	<1.0	<1.0	<1.0	NR	<1.0	<1.0	Chloromethane 9.6; 1,2-Dichloropropane 200
	12/1/93	6.2	200	26	4.2	1.7	<1.0	13	NA	NA	NA	NA	NR	<0.27	<0.22	
	3/29/94	7.3	260	40	6.7	1.9	<1.0	20	NA	NA	NA	NA	NR	<1.0	ND	Dichloromethane 4.6
	6/22/94	4.2	<5.0	22	4.8	<1.0	<1.0	12	NA	NA	NA	NA	NR	<0.22	<0.43	
	10/6/94	6.2	44	8.2	2.6	<1.0	<1.0	4.9	<1.0	<1.0	<1.0	<1.0	NR	<1.0	<1.0	
	1/26/95	5.7	200	31	7.9	<1.0	<1.0	15	NA	NA	NA	NA	NR	<1.0	<1.0	
	3/28/95	5.3	100	22	4.7	1.6	<1.0	7.3	NA	NA	NA	NA	NR	<0.22	<0.09	Dichloromethane 8.3
	1/25/96	4.1	130	13	3.1	<1.0	<1.0	3.0	NA	NA	NA	NA	NR	<1.0	<1.0	
	1/25/96 (D)	4.2	130	13	3.0	<1.0	<1.0	2.9	NA	NA	NA	NA	NR	<1.0	<1.0	
	7/23/96	2.4	92	10	1.8	<1.0	<1.0	1.7	NA	NA	NA	NA	<1.0	<0.22	<0.09	
	1/17/97	3.8	81	14	3.6	1.4	<0.5	<0.5	NA	NA	NA	NA	<0.5	<0.5	<0.5	
	7/8/97	3.4	100	10	2.7	1.6	<0.5	1.2	NA	NA	NA	NA	<0.5	<0.5	<0.5	

Table 2 :
SUMMARY OF DETECTED
VOCs (EPA Method 8010/601) and BTEX (EPA Method 8020/602) IN GROUNDWATER SAMPLES

Calmar - City of Industry

LFR 2455.01

All concentrations reported in micrograms per liter (µg/L)

Well Number	Date Sampled	PCE	TCE	1,1-DCE	1,1-DCA	cis-1,2-DCE	1,2-DCA	1,1,1-TCA	Benzene	Toluene	Ethylbenzene	Xylene	Freon 113	Vinyl Chloride	Trans-1,2-DCE	Other Compounds
MW-3	9/1/88 *	47	20	79	36	TR	0.98	2.3	<0.5	<0.5	TR	<0.5	NR	NR	NR	
	4/29/91 **	170	210	27	2.8	ND	ND	5.4	<1.0	<1.0	<1.0	<1.0	NR	<0.5	ND	
	4/15/93	170	24	71	7.5	<1.0	<1.0	4.2	<1.0	<1.0	<1.0	<1.0	NR	<1.0	<1.0	
	8/2/93	160	23	47	9.6	ND	<1.0	2.3	<5.0	<5.0	<5.0	<5.0	NR	<1.0	<1.0	
	11/30/93	360	19	17	1.0	<1.0	<1.0	2.5	NA	NA	NA	NA	NR	<1.0	<1.0	
	11/30/93 (D)	320	19	16	<1.0	<1.0	<1.0	2.5	NA	NA	NA	NA	NR	<1.0	<1.0	
	3/29/94	410	17	12	1.1	1.2	<1.0	2.9	NA	NA	NA	NA	NR	<1.0	<1.0	Dichloromethane 4.0
	6/22/94	160	11	16	<1.0	<1.0	<1.0	1.6	NA	NA	NA	NA	NR	<0.22	0.51	
	10/6/94	110	28	61	12	2.2	<1.0	2.8	<1.0	6.0	<1.0	<1.0	NR	<1.0	<0.43	Dichloromethane 2.1
	1/26/95	170	8.6	7.1	<1.0	<1.0	<1.0	1.4	NA	NA	NA	NA	NR	<1.0	0.41	
	3/28/95	160	17	53	1.4	1.4	<1.0	2.1	NA	NA	NA	NA	<1.0	NR	<1.0	Chloroform 0.69; Dichloromethane 4.7
	1/26/96	130	76	130	22	<1.0	<1.0	3.7	NA	NA	NA	NA	NR	3.9	<1.0	
	7/23/96	120	34	28	1.3	<1.0	<1.0	1.6	NA	NA	NA	NA	<1.0	<1.0	<1.0	
	1/17/97	61	18	41	0.90	0.71	<0.5	1.4	NA	NA	NA	NA	<0.5	<0.5	<0.5	
	1/17/97 (D)	61	17	55	0.86	0.71	<0.5	1.4	NA	NA	NA	NA	<0.5	<0.5	<0.5	
	7/8/97	54	33	21	2.0	0.85	<0.5	1.4	NA	NA	NA	NA	<0.5	<0.5	<0.5	
	7/8/97 (D)	52	33	22	2.2	0.88	<0.5	1.4	NA	NA	NA	NA	<0.5	<0.5	<0.5	
MW-4	4/16/93	12	4.5	5.4	<1.0	<1.0	<1.0	2.4	<1.0	<1.0	<1.0	<1.0	NR	<1.0	<1.0	
	4/23/93	12	4.9	6.3	<1.0	<1.0	<1.0	2.4	<1.0	<1.0	<1.0	<1.0	NR	<1.0	<1.0	
	8/3/93	8.9	3.6	1.9	ND	ND	<1.0	1.2	<1.0	<1.0	<1.0	<1.0	NR	<1.0	<1.0	Chloromethane 10.0
	11/30/93	10	2.7	1.3	<1.0	<1.0	<1.0	1.7	NA	NA	NA	NA	NR	<1.0	ND	
	3/28/94	16	5.8	2.7	<1.0	<1.0	<1.0	2.8	NA	NA	NA	NA	NR	<1.0	ND	
	4/23/94	12	4.9	6.3	<1.0	<1.0	<1.0	2.4	<1.0	<1.0	<1.0	<1.0	NR	<1.0	<1.0	
	6/21/94	10	3.4	3.7	<1.0	<1.0	<1.0	1.2	NA	<1.0	NA	NA	NR	<1.0	ND	
	10/7/94	12	4.4	1.9	<1.0	<1.0	<1.0	1.5	<1.0	6.8	<1.0	<1.0	NR	<1.0	<1.0	
	1/26/95	12	4.1	<1.0	<1.0	<1.0	<1.0	<1.0	NA	NA	NA	NA	NR	<1.0	<1.0	
	3/29/95	10	2.9	3.7	<1.0	<1.0	<1.0	<1.0	NA	NA	NA	NA	<1.0	<1.0	<1.0	Chloroform 0.09; Dichloromethane 7.5
	1/25/96	2.5	88	1.0	<1.0	<1.0	<1.0	<1.0	NA	NA	NA	NA	NR	<1.0	<1.0	
	7/24/96	8.1	2.5	0.52	<0.5	<0.5	<0.5	<0.5	NA	NA	NA	NA	2.7	<0.5	<0.5	
	1/16/97	5.2	2.1	<0.5	<0.5	<0.5	<0.5	<0.5	NA	NA	NA	NA	2.2	<0.5	<0.5	
	7/8/97	5.0	1.8	<0.5	<0.5	<0.5	<0.5	<0.5	NA	NA	NA	NA	3.3	<0.5	<0.5	
MW-5	4/16/93	5.0	2.8	2.4	<1.0	<1.0	<1.0	1.8	<1.0	<1.0	<1.0	<1.0	NR	<1.0	<1.0	
	4/23/93	5.9	2.2	1.0	<1.0	<1.0	<1.0	1.7	<1.0	1.6	<1.0	<1.0	NR	<1.0	<1.0	
	8/3/93	3.3	1.7	<1.0	<1.0	<1.0	<1.0	2.4	<1.0	<1.0	<1.0	<1.0	NR	<1.0	<1.0	Chloromethane 38.0
	12/1/93	4.2	1.5	<1.0	<1.0	<1.0	<1.0	<1.0	NA	NA	NA	NA	NR	<0.27	<1.0	
	3/28/94	1.1	<1.0	<1.0	<1.0	<1.0	<1.0	<1.0	NA	NA	NA	NA	NR	<1.0	<1.0	
	4/23/94	5.9	2.2	1.0	<1.0	<1.0	<1.0	1.7	<1.0	1.6	<1.0	<1.0	NR	<1.0	<1.0	
	6/21/94	<1.0	<5.0	<1.0	<1.0	<1.0	<1.0	<1.0	NA	<1.0	NA	NA	NR	<1.0	<1.0	
	10/7/94	<1.0	<1.0	<1.0	<1.0	<1.0	<1.0	<1.0	<1.0	<1.0	<1.0	<1.0	NR	<1.0	<1.0	
	1/26/95	3.5	<1.0	<1.0	<1.0	<1.0	<1.0	<1.0	NA	NA	NA	NA	NR	<1.0	<1.0	

Table 2 :
SUMMARY OF DETECTED
VOCs (EPA Method 8010/601) and BTEX (EPA Method 8020/602) IN GROUNDWATER SAMPLES

Calmar - City of Industry

LFR 2455.01

All concentrations reported in micrograms per liter (µg/L)

Well Number	Date Sampled	PCE	TCE	1,1-DCE	1,1-DCA	cis-1,2-DCE	1,2-DCA	1,1,1-TCA	Benzene	Toluene	Ethylbenzene	Xylene	Freon 113	Vinyl Chloride	Trans-1,2-DCE	Other Compounds
MW-5	3/29/95	<1.0	<1.0	<1.0	<1.0	<1.0	<1.0	<1.0	NA	NA	NA	NA	NR	<1.0	<1.0	Dichloromethane 7.2
	1/25/96	<1.0	<1.0	<1.0	<1.0	<1.0	<1.0	<1.0	NA	NA	NA	NA	NR	<1.0	<1.0	
	7/24/96	<0.5	0.59	<0.5	<0.5	<0.5	<0.5	<0.5	NA	NA	NA	NA	<0.5	<0.5	<0.5	
	1/16/97	<0.5	<0.5	<0.5	<0.5	<0.5	<0.5	<0.5	NA	NA	NA	NA	<0.5	<0.5	<0.5	
	7/8/97	WELL INACCESSIBLE														
MW-6	8/3/93	4.8	12	2.6	<1.0	<1.0	<1.0	2.6	<1.0	<1.0	<1.0	<1.0	NR	<1.0	<1.0	Chloromethane 14.0
	8/10/93	11	110	7.3	<2.0	<2.0	<2.0	<2.0	<2.0	<2.0	<2.0	<2.0	NR	<2.0	<2.0	
	11/30/93	5.0	250	<1.0	<1.0	<1.0	<1.0	<1.0	NA	NA	NA	NA	NR	<1.0	<0.23	
	3/28/94	<1.0	1.6	<1.0	<1.0	<1.0	<1.0	<1.0	NA	NA	NA	NA	NR	<1.0	<1.0	
	6/22/94	6.3	55	4.5	<1.0	<1.0	<1.0	<1.0	NA	NA	NA	NA	NR	<0.22	<0.43	
	6/22/94 (D)	5.9	48	3.2	<1.0	<1.0	<1.0	<1.0	NA	NA	NA	NA	NR	<0.22	<0.43	
	10/7/94	6.7	36	<1.0	<1.0	<1.0	<1.0	<1.0	<1.0	<1.0	<1.0	<1.0	NR	<1.0	<1.0	
	1/27/95	3.0	220	<1.0	<1.0	<1.0	<1.0	1.4	NA	NA	NA	NA	NR	<1.0	<1.0	
	3/29/95	3.7	47	2.0	<1.0	<1.0	<1.0	<1.0	NA	NA	NA	NA	NR	<1.0	<1.0	Chloroform 0.11; Dichloromethane 5.5
	1/25/96	3.3	280	1.8	<1.0	<1.0	<1.0	<1.0	NA	NA	NA	NA	NR	<1.0	<1.0	
	7/24/96	2.4	77	0.71	<0.5	0.61	<0.5	<0.5	NA	NA	NA	NA	<0.5	<0.5	<0.5	
	1/16/97	1.9	91	0.57	<0.5	1.6	<0.5	<0.5	NA	NA	NA	NA	<0.5	<0.5	<0.5	
	1/16/97 (D)	1.9	90	0.93	<0.5	1.5	<0.5	<0.5	NA	NA	NA	NA	<0.5	<0.5	<0.5	
	7/8/97	<3.0	370	<3.0	<3.0	4.5	<3.0	<3.0	NA	NA	NA	NA	<3.0	<3.0	<3.0	
MW-7	8/3/93	3.7	16	12	<1.0	<1.0	<1.0	3.4	<1.0	<1.0	<1.0	<1.0	NR	<1.0	<1.0	
	8/10/93	3.9	8.3	7	<1.0	<1.0	<1.0	<1.0	<1.0	<1.0	<1.0	<1.0	NR	<1.0	<1.0	
	8/10/93 (D)	3.1	11	13	<1.0	<1.0	<1.0	<1.0	<1.0	<1.0	<1.0	<1.0	NR	<1.0	<1.0	
	11/30/93	4.9	11	7.7	<1.0	<1.0	<1.0	<1.0	NA	NA	NA	NA	NR	<1.0	<1.0	
	3/28/94	6.6	9.9	6.5	<1.0	<1.0	<1.0	1.1	NA	NA	NA	NA	NR	<1.0	<1.0	
	6/22/94	5.2	7.1	7.0	<1.0	<1.0	<1.0	<1.0	NA	NA	NA	NA	NR	<0.22	<0.43	
	10/7/94	5.8	6.0	3.6	<1.0	<1.0	<1.0	<1.0	<1.0	<1.0	<1.0	<1.0	NR	<1.0	<1.0	
	1/27/95	5.4	38	22	1.1	<1.0	<1.0	1.1	NA	NA	NA	NA	NR	<1.0	<1.0	
	3/29/95	3.8	4.4	3.6	<1.0	<1.0	<1.0	<1.0	NA	NA	NA	NA	NR	<1.0	<1.0	Chloroform 0.08; Dichloromethane 5.2
	1/25/96	2.2	39	65	4.2	<1.0	<1.0	<1.0	NA	NA	NA	NA	NR	2.3	<1.0	
	7/24/96	0.87	43	80	2.8	2.3	<0.5	<0.5	NA	NA	NA	NA	<0.5	<0.5	<0.5	
	1/16/97	1.6	45	72	3.0	3.5	<0.5	<0.5	NA	NA	NA	NA	<0.5	1.0	<0.5	
	7/8/97	3.3	18	27	1.7	1.6	<0.5	<0.5	NA	NA	NA	NA	<0.5	0.62	<0.5	
P-1	10/11/91	10	5.0	12	ND	ND	ND	ND	<1.0	<1.0	<1.0	<1.0	NR	<5.0	<1.0	Methylene chloride 1.0***; Freon-TF 5.0
	3/25/92	13	6.9	41	ND	ND	<1.0	2.4	<0.5	2.0	<0.5	<0.5	NR	<1.0	<1.0	
	4/16/93	18	6.0	55	<1.0	<1.0	<1.0	2.4	<1.0	<1.0	<1.0	<1.0	NR	<1.0	<1.0	
	4/16/93 (D)	16	5.7	57	<1.0	<1.0	<1.0	2.1	<1.0	<1.0	<1.0	<1.0	NR	<1.0	<1.0	
	8/2/93	14	7.8	49	1.6	ND	<1.0	3.2	<1.0	<1.0	<1.0	<1.0	NR	<1.0	<1.0	
	12/1/93	20	7.5	69	<1.0	<1.0	<1.0	2.5	NA	NA	NA	NA	NR	<0.27	<0.22	
	3/29/94	22	11	90	2.1	<1.0	<1.0	3	NA	NA	NA	NA	NR	0.59	<1.0	Dichloromethane 5.2
	6/22/94	18	8.4	68	<1.0	<1.0	<1.0	1.7	NA	<1.0	NA	NA	NR	<0.22	<0.43	

Table 2 :
SUMMARY OF DETECTED
VOCs (EPA Method 8010/601) and BTEX (EPA Method 8020/602) IN GROUNDWATER SAMPLES

Caimar - City of Industry

LFR 2455.01

All concentrations reported in micrograms per liter (µg/L)

Well Number	Date Sampled	PCE	TCE	1,1-DCE	1,1-DCA	cis-1,2-DCE	1,2-DCA	1,1,1-TCA	Benzene	Toluene	Ethylbenzene	Xylene	Freon 113	Vinyl Chloride	Trans-1,2-DCE	Other Compounds
P-1	10/6/94	21	9.5	120	1.9	<1.0	<1.0	2.6	<1.0	12	<1.0	<1.0	NR	<1.0	<1.0	Dichloromethane 3.3
	1/27/95	13	3.9	30	<1.0	<1.0	<1.0	<1.0	NA	NA	NA	NA	NR	<1.0	<1.0	
	1/27/95 (D)	15	4.6	36	<1.0	<1.0	<1.0	<1.0	NA	NA	NA	NA	NR	<1.0	<1.0	
	3/29/95	13	6.1	51	1.4	<1.0	<1.0	<1.0	NA	NA	NA	NA	NR	<1.0	<1.0	Chloroform 0.20; Dichloromethane 3.7
	1/26/96	23	29	100	3.7	<1.0	<1.0	2.1	NA	NA	NA	NA	NR	<1.0	<1.0	
	7/23/96	32	29	120	1.4	<1.0	<1.0	<1.0	NA	NA	NA	NA	<1.0	<1.0	<1.0	
	1/16-17/97 ****	NA	NA	NA	NA	NA	NA	NA	NA	NA	NA	NA	NA	NA	NA	
	7/8/97	39	48	120	4.0	1.9	<0.5	1.3	NA	NA	NA	NA	<0.5	<0.5	<0.5	
P-2	5/13/91 **	20	5.7	ND	ND	ND	ND	ND	<1.0	<1.0	<1.0	<1.0	NR	<1.0	ND	
	10/11/91	14	7	4	ND	ND	ND	ND	<1.0	<1.0	<1.0	<1.0	NR	<5.0	<1.0	Freon-TF 15.0; Chloromethane 1.0 Methylene chloride 1.0***
	3/25/92	7.4	7.5	3.9	ND	ND	<1.0	0.60	<0.5	<0.5	<0.5	<0.5	NR	<0.5	<0.5	
	4/15/93	18	140	58	8.4	12	<1.0	1.1	<1.0	1.2	<1.0	<1.0	NR	<1.0	<1.0	
	8/3/93	12	93	ND	8.3	9.4	<1.0	1.1	<1.0	<1.0	<1.0	<1.0	NR	<1.0	<1.0	Chloromethane 4.1
	11/30/93	11	210	45	8.3	11	<1.0	<1.0	NA	NA	NA	NA	NR	<1.0	ND	
	3/29/94	70	230	57	9.2	8.6	<1.0	2.4	NA	NA	NA	NA	NR	0.37	1.5	Dichloromethane 4.3; 1,1,2-TCA 0.20
	6/21/94	44	98	47	6.3	<1.0	<1.0	1.3	NA	NA	NA	NA	NR	<1.0	ND	
	6/21/94 (D)	48	91	33	4.4	<1.0	<1.0	1.4	NA	NA	NA	NA	NR	<1.0	ND	
	10/6/94	44	130	43	6.4	9.5	<1.0	1.6	<1.0	<1.0	<1.0	<1.0	NR	0.60	<1.0	Dichloromethane 1.8; 1,1,2-TCA 0.52
	1/27/95	150	130	44	4.2	<1.0	<1.0	3.2	NA	NA	NA	NA	NR	<1.0	<1.0	
	3/29/95	130	110	48	5.6	7.3	<1.0	3.7	NA	NA	NA	NA	NR	<0.5	0.19	Chloroform 0.18; Dichloromethane 2.6
	1/26/96	110	200	68	10	<1.0	<1.0	10.0	NA	NA	NA	NA	NR	<1.0	<1.0	
	7/24/96	79	51	26	3.6	2.8	<0.5	3.4	NA	NA	NA	NA	<0.5	<0.5	<0.5	
	1/17/97	130	100	68	11	8.2	<0.5	9.0	NA	NA	NA	NA	<0.5	<0.5	<0.5	
	7/8/97	110	120	67	12	9.8	<0.5	4.4	NA	NA	NA	NA	<0.5	<0.5	<0.5	
P-3	5/13/91 **	5.2	2.3	ND	ND	ND	ND	ND	<1.0	<1.0	<1.0	<1.0	NR	<1.0	ND	
	10/11/91	7	3	ND	ND	ND	ND	ND	<1.0	2	<1.0	<1.0	NR	<5.0	<1.0	Freon-TF 4.0; Chloroform 2.0 Methylene chloride 1.0***
	3/25/92	4.9	3.8	1.7	ND	ND	<0.5	0.7	<0.5	2.7	<0.5	<0.5	NR	<0.50	<0.50	
	4/15/93 (D)	6.7	4.5	<1.0	<1.0	<1.0	<1.0	2.2	<1.0	<1.0	<1.0	<1.0	NR	<1.0	<1.0	
	4/15/93	6.5	4.3	<1.0	<1.0	<1.0	<1.0	2.1	<1.0	<1.0	<1.0	<1.0	NR	<1.0	<1.0	
	8/2/93	4	3.2	<1.0	<1.0	<1.0	<1.0	<1.0	<1.0	<1.0	<1.0	<1.0	NR	<1.0	<1.0	Chloromethane 15.0
	12/1/93	5.7	4.3	<1.0	<1.0	<1.0	<1.0	<1.0	NA	<1.0	NA	NA	NR	<0.27	<0.22	
	3/28/94	8	4.5	1.1	<1.0	<1.0	<1.0	1.1	NA	NA	NA	NA	NR	<1.0	<1.0	
	3/28/94 (D)	8	4.7	1.7	<1.0	<1.0	<1.0	1.1	NA	NA	NA	NA	NR	<1.0	ND	
	6/21/94	5.7	4.6	<1.0	<1.0	<1.0	<1.0	<1.0	NA	NA	NA	NA	NR	<1.0	ND	
	10/7/94	6	2	<1.0	<1.0	<1.0	<1.0	<1.0	<1.0	<1.0	<1.0	<1.0	NR	<1.0	<1.0	
	1/26/95	5	1.3	<1.0	<1.0	<1.0	<1.0	<1.0	NA	NA	NA	NA	NR	<1.0	<1.0	

Table 2 :
SUMMARY OF DETECTED
VOCs (EPA Method 8010/601) and BTEX (EPA Method 8020/602) IN GROUNDWATER SAMPLES

Calmar - City of Industry

LFR 2455.01

All concentrations reported in micrograms per liter (µg/L)

Well Number	Date Sampled	PCE	TCE	1,1-DCE	1,1-DCA	cis-1,2-DCE	1,2-DCA	1,1,1-TCA	Benzene	Toluene	Ethylbenzene	Xylene	Freon 113	Vinyl Chloride	Trans-1,2-DCE	Other Compounds
P-3	3/29/95	**2.4**	<1.0	<1.0	<1.0	<1.0	<1.0	<1.0	NA	NA	NA	NA	NR	<0.1	<1.0	Dichloromethane 7.4
	1/25/96	<1.0	<1.0	<1.0	<1.0	<1.0	<1.0	<1.0	NA	NA	NA	NA	NR	<1.0	<1.0	
	7/24/96	<0.5	<0.5	<0.5	<0.5	<0.5	<0.5	<0.5	NA	NA	NA	NA	**1.4**	<0.5	<0.5	
	1/16/97	<0.5	<0.5	<0.5	<0.5	<0.5	<0.5	<0.5	NA	NA	NA	NA	**7.3**	<0.5	<0.5	Chloroform 0.84
	7/8/97	**0.74**	<0.5	<0.5	<0.5	<0.5	<0.5	<0.5	NA	NA	NA	NA	**2.6**	<0.5	<0.5	
Equipment Blanks	11/30/93	<1.0	<1.0	<1.0	<1.0	<1.0	<1.0	<1.0	<1.0	<1.0	<1.0	<1.0	NR	<1.0	ND	
	12/1/93	<1.0	<1.0	<1.0	<1.0	<1.0	<1.0	<1.0	NA	<1.0	NA	NA	NR	<0.27	<0.22	
	4/15/93	<1.0	<1.0	<1.0	<1.0	<1.0	<1.0	<1.0	**1.0**	**1.2**	<1.0	<1.0	NR	<1.0	<1.0	
	4/16/93	<1.0	<1.0	<1.0	<1.0	<1.0	<1.0	<1.0	<1.0	<1.0	<1.0	<1.0	NR	<1.0	<1.0	
	4/23/93	<1.0	<1.0	<1.0	<1.0	<1.0	<1.0	<1.0	<1.0	<1.0	<1.0	<1.0	NR	<1.0	<1.0	
	8/2/93	<1.0	<1.0	<1.0	<1.0	<1.0	<1.0	<1.0	<1.0	<1.0	<1.0	<1.0	NR	<1.0	<1.0	
	8/3/93	<1.0	<1.0	<1.0	<1.0	<1.0	<1.0	<1.0	NA	<1.0	NA	NA	NR	<1.0	<1.0	
	8/10/93	<1.0	<1.0	<1.0	<1.0	<1.0	<1.0	<1.0	<1.0	<1.0	<1.0	<1.0	NR	<1.0	<1.0	
	6/21/94	<1.0	<1.0	<1.0	<1.0	<1.0	<1.0	<1.0	<1.0	<1.0	<1.0	<1.0	NR	<1.0	ND	
	10/6/94	<1.0	<1.0	<1.0	<1.0	<1.0	<1.0	<1.0	<1.0	<1.0	<1.0	<1.0	NR	<1.0	<1.0	
	10/7/94	<1.0	<1.0	<1.0	<1.0	<1.0	<1.0	<1.0	<1.0	<1.0	<1.0	<1.0	NR	<1.0	<1.0	
	3/28/95	<1.0	<1.0	<1.0	<1.0	<1.0	<1.0	<1.0	NA	NA	NA	NA	NR	<1.0	<1.0	
	3/29/95	<1.0	<1.0	<1.0	<1.0	<1.0	<1.0	<1.0	NA	NA	NA	NA	NR	<1.0	<1.0	Dichloromethane 5.5
	1/26/96	<1.0	<1.0	<1.0	<1.0	<1.0	<1.0	<1.0	NA	NA	NA	NA	NR	<1.0	<1.0	
	7/24/96	<0.5	<0.5	<0.5	<0.5	<0.5	<0.5	<0.5	NA	NA	NA	NA	<0.5	<0.5	<0.5	
	1/16/97	<0.5	<0.5	<0.5	<0.5	<0.5	<0.5	<0.5	NA	NA	NA	NA	<0.5	<0.5	<0.5	
	1/17/97	<0.5	<0.5	<0.5	<0.5	<0.5	<0.5	<0.5	NA	NA	NA	NA	<0.5	<0.5	<0.5	Methylene chloride 5.3
	7/8/97	<0.5	<0.5	<0.5	<0.5	<0.5	<0.5	<0.5	NA	NA	NA	NA	<0.5	<0.5	<0.5	
Trip Blanks	1/27/95	<1.0	<1.0	<1.0	<1.0	<1.0	<1.0	<1.0	NA	<1.0	NA	NA	NA	NA	NA	
	7/24/96	<0.5	<0.5	<0.5	<0.5	<0.5	<0.5	<0.5	NA	NA	NA	NA	<0.5	<0.5	<0.5	

NOTES:

< = Designates less than laboratory detection limit.
PCE = Tetrachloroethene
TCE = Trichloroethene
1,1-DCE = 1,1-Dichloroethene
1,1-DCA = 1,1-Dichloroethane
cis-1,2-DCE = cis-1,2-Dichloroethene
1,2-DCA = 1,2-Dichloroethane
1,1,1-TCA = 1,1,1-Trichloroethane
ND = Not Detected (laboratory detection limits unavailable)
TR = Trace, below detection limit (per Camp Dresser & McKee Inc., 1991)
NA = Not Analyzed
NR = Not Reported
D = Duplicate sample

* = Report by BCL Associates, Inc. October 1988
** = Report by Camp, Dresser & McKee, Inc., May 1991
*** = 10/11/91 Methylene Chloride detected at 1.0 µg/l in blank method
**** = Well P-1 was not sampled due to flooding in area.

QA/QC: _____

Reproduced with permission granted by Thomas Bros. Maps®
MAP SOURCE: Thomas Bros Guide®, Los Angeles County, California, pp. **637, 638, 677 & 678**, 1996.

0 1/4 1/2 1 mile

Site Vicinity

Levine•Fricke•Recon

Project No. 2455

Calmar

Figure 1

2455-70 _ 11212(MFH:sc)

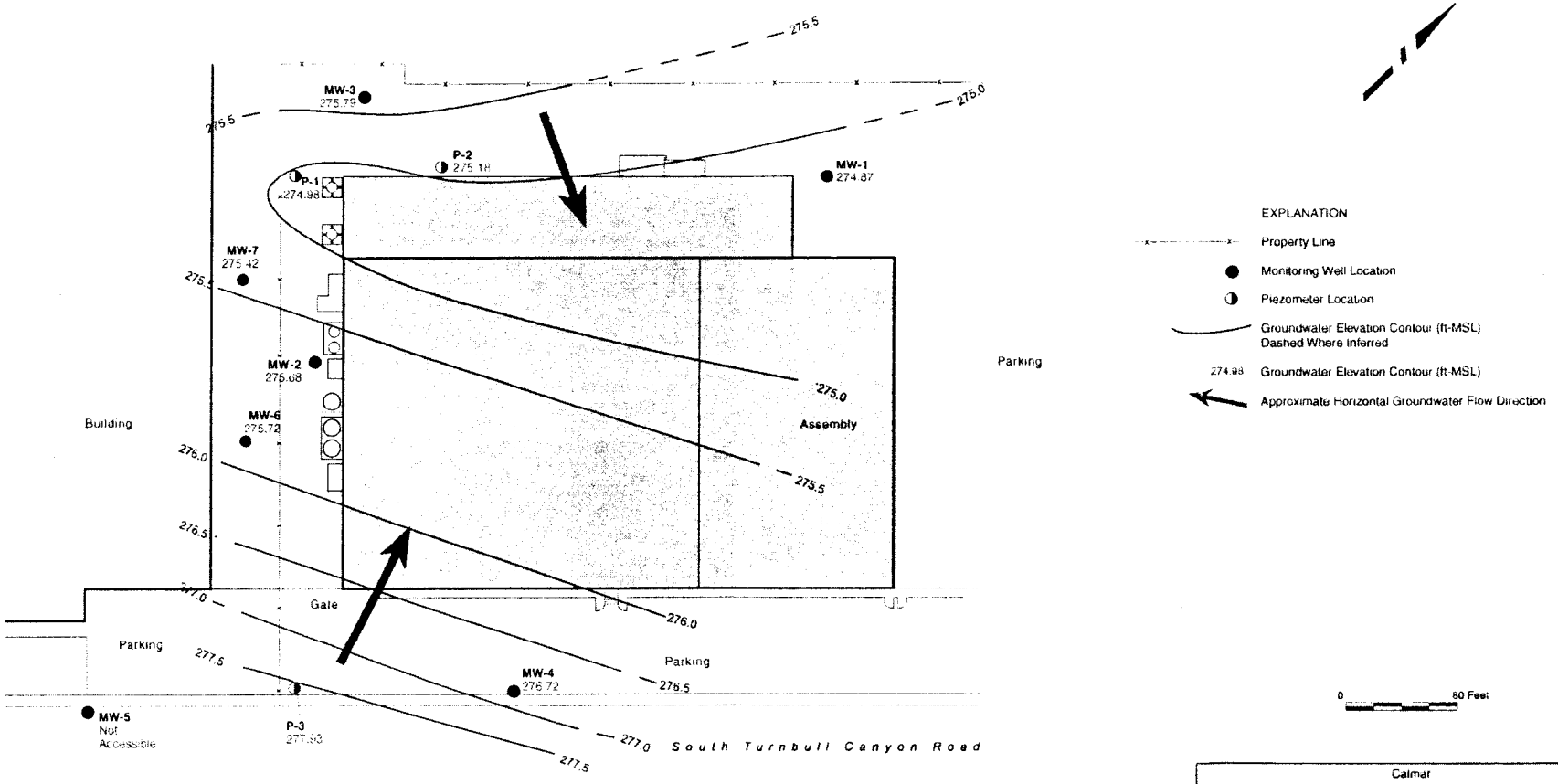

Calmar

Groundwater Elevations Contours
July 1997

Levine-Fricke-Recon

Figure 2

Project No. 2455

2455-TA 10179ZMF14/mg

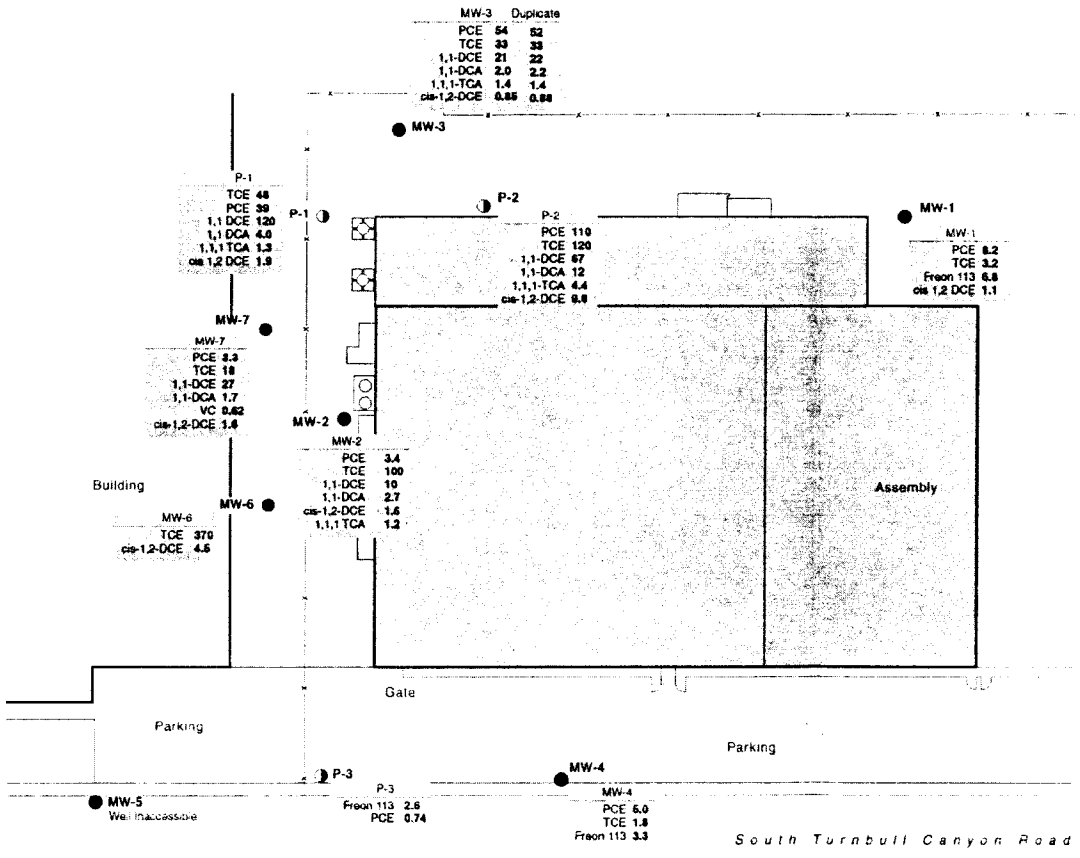

EXPLANATION

Property Line

Monitoring Well Location

Piezometer Location

MW-1 / PCE 8.2 — Groundwater analytical data showing halogenated volatile organic compounds (HVOCs) constituent and concentration in micrograms per liter (µg/L)

PCE	Tetrachloroethene
TCE	Trichloroethene
1,1-DCE	1,1-Dichloroethene
1,1-DCA	1,1-Dichloroethane
cis-1,2-DCE	cis-1,2-Dichloroethene
1,1,1-TCA	1,1,1-Trichloroethane
VC	Vinyl Chloride

NOTES: All samples analyzed using EPA Method 8010.

0 — 80 Feet

Calmar

Summary of HVOCs and BTEX Detected in Groundwater Samples July 1997

Levine-Fricke-Recon

Figure 3

Project No. 2455

2455 77, 10/19/97 PAC/Vmg

APPENDIX A

Levine·Fricke·Recon Field Protocols

GROUNDWATER MONITORING WELL DEVELOPMENT AND SAMPLING

All equipment used to develop or sample the wells was washed in a laboratory-grade detergent and/or steam-cleaned prior to use in each monitoring well.

Development of groundwater monitoring wells prior to sampling was conducted to remove sediments from the well boring and enhance communication with the surrounding formation. Development was conducted using one or a combination of the following techniques: overpumping, surging, swabbing, and bailing. The groundwater temperature, specific conductivity, turbidity, and pH were monitored during the development process.

Prior to groundwater sampling, approximately 4 to 10 casing volumes were purged from each well. Purging was conducted using an electric submersible pump. The groundwater temperature, specific conductance, turbidity, and pH were measured throughout the purging process. These groundwater parameters were allowed to reach relative stabilization before groundwater samples were collected for the purpose of collecting a representative groundwater sample.

Purged groundwater was collected in Department of Transportation-approved drums for storage on site, or stored in an on-site PolyTank.

Groundwater samples were collected from all wells using a Teflon disposable bailer suspended from a clean (new) length of rope. Groundwater samples were decanted from the bailer into appropriate laboratory-supplied 40-milliliter vials using a bottom decanting petcock device. The containers were sealed, labeled, and placed in a chilled cooler for delivery to the analytical laboratory. Strict chain-of-custody protocol was followed throughout the sample handling process.

MEASUREMENT OF GROUNDWATER ELEVATION

After the groundwater monitoring wells were installed, the top of each well casing was surveyed for vertical and horizontal control by a licensed surveyor. Elevation was surveyed to the nearest 0.01 foot mean sea level. Horizontal control was tied to a United States Geological Survey or Los Angeles County benchmark.

Prior to collecting groundwater samples, an electronic water-level meter was used to measure the depth to groundwater to the nearest 0.01 foot in each well. Groundwater elevations were calculated and used to construct a groundwater elevation contour map from which the direction of groundwater flow and gradient could be evaluated.

APPENDIX B

Laboratory Certificates and Chain-of-Custody Documentation

APPENDIX B

Laboratory Certificates and Chain-of-Custody Documentation

ANALYTICAL REPORT

Our Quality Control Is Your Quality Assurance

LOG NO: G97-07-115

Received: 08 JUL 97
Mailed : 15 JUL 97

Mr. Martin Hamman
Levine-Fricke-Recon
1920 Main Street, Suite 750
Irvine, CA 92614-7211

Project: 2455.01

REPORT OF ANALYTICAL RESULTS

LOG NO	SAMPLE DESCRIPTION, AQUEOUS SAMPLES	DATE SAMPLED
07-115-1	MW4-797	08 JUL 97
07-115-2	P3-797	08 JUL 97
07-115-3	MW1-797	08 JUL 97
07-115-4	P2-797	08 JUL 97
07-115-5	MW7-797	08 JUL 97

PARAMETER	07-115-1	07-115-2	07-115-3	07-115-4	07-115-5
Halocarbons (8010)					
Date Analyzed	07/10/97	07/10/97	07/10/97	07/10/97	07/10/97
Date Confirmed	07/10/97	07/10/97	07/10/97	07/10/97	07/10/97
Dilution Factor, Times	1	1	1	1	1
1,1,1-Trichloroethane, ug/L	<0.5	<0.5	<0.5	4.4	<0.5
1,1,2,2-Tetrachloroethane, ug/L	<0.5	<0.5	<0.5	<0.5	<0.5
1,1,2-Trichloroethane, ug/L	<0.5	<0.5	<0.5	<0.5	<0.5
1,1-Dichloroethane, ug/L	<0.5	<0.5	<0.5	12	1.7
1,1-Dichloroethene, ug/L	<0.5	<0.5	<0.5	67	27
1,2-Dichloroethane, ug/L	<0.5	<0.5	<0.5	<0.5	<0.5
1,2-Dichlorobenzene, ug/L	<0.5	<0.5	<0.5	<0.5	<0.5
1,2-Dichloropropane, ug/L	<0.5	<0.5	<0.5	<0.5	<0.5
1,3-Dichlorobenzene, ug/L	<0.5	<0.5	<0.5	<0.5	<0.5
1,4-Dichlorobenzene, ug/L	<0.5	<0.5	<0.5	<0.5	<0.5
Bromodichloromethane, ug/L	<0.5	<0.5	<0.5	<0.5	<0.5
Bromomethane, ug/L	<0.5	<0.5	<0.5	<0.5	<0.5
Bromoform, ug/L	<0.5	<0.5	<0.5	<0.5	<0.5
Chlorobenzene, ug/L	<0.5	<0.5	<0.5	<0.5	<0.5
Carbon Tetrachloride, ug/L	<0.5	<0.5	<0.5	<0.5	<0.5
Chloroethane, ug/L	<0.5	<0.5	<0.5	<0.5	<0.5
Chloroform, ug/L	<0.5	<0.5	<0.5	<0.5	<0.5
Chloromethane, ug/L	<0.5	<0.5	<0.5	<0.5	<0.5
Dibromochloromethane, ug/L	<0.5	<0.5	<0.5	<0.5	<0.5
Freon 113, ug/L	3.3	2.6	6.8	<0.5	<0.5

VOC Analytical Laboratories, Inc.
1212 East Katella Avenue, Anaheim CA 92805 - **Phone:** (714) 978-0113 - **Fax:** (714) 978-9284

LOG NO: G97-07-115

Received: 08 JUL 97
Mailed : 15 JUL 97

Mr. Martin Hamman
Levine-Fricke-Recon
1920 Main Street, Suite 750
Irvine, CA 92614-7211

Project: 2455.01

REPORT OF ANALYTICAL RESULTS

LOG NO	SAMPLE DESCRIPTION, AQUEOUS SAMPLES	DATE SAMPLED
07-115-1	MW4-797	08 JUL 97
07-115-2	P3-797	08 JUL 97
07-115-3	MW1-797	08 JUL 97
07-115-4	P2-797	08 JUL 97
07-115-5	MW7-797	08 JUL 97

PARAMETER	07-115-1	07-115-2	07-115-3	07-115-4	07-115-5
Methylene chloride, ug/L	<2	<2	<2	<2	<2
Trichloroethene, ug/L	1.8	<0.5	3.2	120	18
Trichlorofluoromethane, ug/L	<0.5	<0.5	<0.5	<0.5	<0.5
Tetrachloroethene, ug/L	5.0	0.74	8.2	110	3.3
Vinyl chloride, ug/L	<0.5	<0.5	<0.5	<0.5	0.62
cis-1,2-Dichloroethene, ug/L	<0.5	<0.5	1.1	9.8	1.6
cis-1,3-Dichloropropene, ug/L	<0.5	<0.5	<0.5	<0.5	<0.5
trans-1,2-Dichloroethene, ug/L	<0.5	<0.5	<0.5	<0.5	<0.5
trans-1,3-Dichloropropene, ug/L	<0.5	<0.5	<0.5	<0.5	<0.5
Surrogates **					
Bromochloromethane Reported, ug/L	54.7	52.3	51.9	55.0	57.0
Bromochloromethane Theoretical, ug/L	50.0	50.0	50.0	50.0	50.0

LOG NO: G97-07-115

Received: 08 JUL 97
Mailed : 15 JUL 97

Mr. Martin Hamman
Levine-Fricke-Recon
1920 Main Street, Suite 750
Irvine, CA 92614-7211

Project: 2455.01

REPORT OF ANALYTICAL RESULTS

LOG NO	SAMPLE DESCRIPTION, AQUEOUS SAMPLES	DATE SAMPLED
07-115-6	MW6-797	08 JUL 97
07-115-7	MW2-797	08 JUL 97
07-115-8	P1-797	08 JUL 97
07-115-9	MW3-797	08 JUL 97
07-115-10	DUP-797	08 JUL 97

PARAMETER	07-115-6	07-115-7	07-115-8	07-115-9	07-115-10
Halocarbons (8010)					
Date Analyzed	07/12/97	07/10/97	07/10/97	07/11/97	07/11/97
Date Confirmed	07/12/97	07/10/97	07/10/97	07/11/97	07/11/97
Dilution Factor, Times	5	1	1	1	1
1,1,1-Trichloroethane, ug/L	<3	1.2	1.3	1.4	1.4
1,1,2,2-Tetrachloroethane, ug/L	<3	<0.5	<0.5	<0.5	<0.5
1,1,2-Trichloroethane, ug/L	<3	<0.5	<0.5	<0.5	<0.5
1,1-Dichloroethane, ug/L	<3	2.7	4.0	2.0	2.2
1,1-Dichloroethene, ug/L	<3	10	120	21	22
1,2-Dichloroethane, ug/L	<3	<0.5	<0.5	<0.5	<0.5
1,2-Dichlorobenzene, ug/L	<3	<0.5	<0.5	<0.5	<0.5
1,2-Dichloropropane, ug/L	<3	<0.5	<0.5	<0.5	<0.5
1,3-Dichlorobenzene, ug/L	<3	<0.5	<0.5	<0.5	<0.5
1,4-Dichlorobenzene, ug/L	<3	<0.5	<0.5	<0.5	<0.5
Bromodichloromethane, ug/L	<3	<0.5	<0.5	<0.5	<0.5
Bromomethane, ug/L	<3	<0.5	<0.5	<0.5	<0.5
Bromoform, ug/L	<3	<0.5	<0.5	<0.5	<0.5
Chlorobenzene, ug/L	<3	<0.5	<0.5	<0.5	<0.5
Carbon Tetrachloride, ug/L	<3	<0.5	<0.5	<0.5	<0.5
Chloroethane, ug/L	<3	<0.5	<0.5	<0.5	<0.5
Chloroform, ug/L	<3	<0.5	<0.5	<0.5	<0.5
Chloromethane, ug/L	<3	<0.5	<0.5	<0.5	<0.5
Dibromochloromethane, ug/L	<3	<0.5	<0.5	<0.5	<0.5

LOG NO: G97-07-115

Received: 08 JUL 97
Mailed : 15 JUL 97

Mr. Martin Hamman
Levine-Fricke-Recon
1920 Main Street, Suite 750
Irvine, CA 92614-7211

Project: 2455.01

REPORT OF ANALYTICAL RESULTS

LOG NO	SAMPLE DESCRIPTION, AQUEOUS SAMPLES	DATE SAMPLED
07-115-6	MW6-797	08 JUL 97
07-115-7	MW2-797	08 JUL 97
07-115-8	P1-797	08 JUL 97
07-115-9	MW3-797	08 JUL 97
07-115-10	DUP-797	08 JUL 97

PARAMETER	07-115-6	07-115-7	07-115-8	07-115-9	07-115-10
Freon 113, ug/L	<3	<0.5	<0.5	<0.5	<0.5
Methylene chloride, ug/L	<10	<2	<2	<2	<2
Trichloroethene, ug/L	370	100	48	33	33
Trichlorofluoromethane, ug/L	<3	<0.5	<0.5	<0.5	<0.5
Tetrachloroethene, ug/L	<3	3.4	39	54	52
Vinyl chloride, ug/L	<3	<0.5	<0.5	<0.5	<0.5
cis-1,2-Dichloroethene, ug/L	4.5	1.6	1.9	0.85	0.88
cis-1,3-Dichloropropene, ug/L	<3	<0.5	<0.5	<0.5	<0.5
trans-1,2-Dichloroethene, ug/L	<3	<0.5	<0.5	<0.5	<0.5
trans-1,3-Dichloropropene, ug/L	<3	<0.5	<0.5	<0.5	<0.5
Surrogates **					
Bromochloromethane Reported, ug/L	268	53.9	54.0	53.2	50.1
Bromochloromethane Theoretical, ug/L	250	50.0	50.0	50.0	50.0

LOG NO: G97-07-115

Received: 08 JUL 97
Mailed : 15 JUL 97

Mr. Martin Hamman
Levine-Fricke-Recon
1920 Main Street, Suite 750
Irvine, CA 92614-7211

Project: 2455.01

REPORT OF ANALYTICAL RESULTS

LOG NO	SAMPLE DESCRIPTION, AQUEOUS SAMPLES	DATE SAMPLED
07-115-11	EB1-797	08 JUL 97

PARAMETER	07-115-11
Halocarbons (8010)	
Date Analyzed	07/10/97
Date Confirmed	07/10/97
Dilution Factor, Times	1
1,1,1-Trichloroethane, ug/L	<0.5
1,1,2,2-Tetrachloroethane, ug/L	<0.5
1,1,2-Trichloroethane, ug/L	<0.5
1,1-Dichloroethane, ug/L	<0.5
1,1-Dichloroethene, ug/L	<0.5
1,2-Dichloroethane, ug/L	<0.5
1,2-Dichlorobenzene, ug/L	<0.5
1,2-Dichloropropane, ug/L	<0.5
1,3-Dichlorobenzene, ug/L	<0.5
1,4-Dichlorobenzene, ug/L	<0.5
Bromodichloromethane, ug/L	<0.5
Bromomethane, ug/L	<0.5
Bromoform, ug/L	<0.5
Chlorobenzene, ug/L	<0.5
Carbon Tetrachloride, ug/L	<0.5
Chloroethane, ug/L	<0.5
Chloroform, ug/L	<0.5
Chloromethane, ug/L	<0.5
Dibromochloromethane, ug/L	<0.5
Freon 113, ug/L	<0.5
Methylene chloride, ug/L	<2
Trichloroethene, ug/L	<0.5
Trichlorofluoromethane, ug/L	<0.5

LOG NO: G97-07-115

Received: 08 JUL 97
Mailed : 15 JUL 97

Mr. Martin Hamman
Levine-Fricke-Recon
1920 Main Street, Suite 750
Irvine, CA 92614-7211

Project: 2455.01

REPORT OF ANALYTICAL RESULTS

LOG NO	SAMPLE DESCRIPTION, AQUEOUS SAMPLES	DATE SAMPLED
07-115-11	EB1-797	08 JUL 97

PARAMETER	07-115-11
Tetrachloroethene, ug/L	<0.5
Vinyl chloride, ug/L	<0.5
cis-1,2-Dichloroethene, ug/L	<0.5
cis-1,3-Dichloropropene, ug/L	<0.5
trans-1,2-Dichloroethene, ug/L	<0.5
trans-1,3-Dichloropropene, ug/L	<0.5
Surrogates **	
Bromochloromethane Reported, ug/L	52.6
Bromochloromethane Theoretical, ug/L	50.0

Greta Galoustian, Laboratory Director

The analytical results within this report relate only to the specific compounds and samples investigated and may not necessarily reflect other apparently similar material from the same or a similar location.

This report shall not be reproduced, except in full, without the written approval of VOC. No use of this report for promotional or advertising purposes is permitted without prior written VOC approval.

VOC Analytical Laboratories, Inc.
1212 East Katella Avenue, Anaheim CA 92805 - **Phone:** (714) 978-0113 - **Fax:** (714) 978-9284

ORDER PLACED FOR CLIENT: Levine-Fricke-Recon 9707115 :
VOC ANALYTICAL : GLEN LAB : 14:15:02 16 OCT 1997 - P. 1 :

MPLES...	SAMPLE DESCRIPTION..	DETERM.....	DATE..... ANALYZED	METHOD.....	EQUIP.	BATCH..	ID.NO
707115*1	MW4-797	VH.8010	07.10.97	8010	536-34	973075	8171
707115*2	P3-797	VH.8010	07.10.97	8010	536-34	973075	8171
9707115*3	MW1-797	VH.8010	07.10.97	8010	536-34	973075	8171
9707115*4	P2-797	VH.8010	07.10.97	8010	536-34	973075	8171
707115*5	MW7-797	VH.8010	07.10.97	8010	536-34	973075	8171
707115*6	MW6-797	VH.8010	07.12.97	8010	536-34	973076	8171
9707115*7	MW2-797	VH.8010	07.10.97	8010	536-34	973075	8171
707115*8	P1-797	VH.8010	07.10.97	8010	536-34	973075	8171
707115*9	MW3-797	VH.8010	07.11.97	8010	536-34	973075	8171
9707115*10	DUP-797	VH.8010	07.11.97	8010	536-34	973075	8171
707115*11	EB1-797	VH.8010	07.10.97	8010	536-34	973075	8171

**

Notes: Equipment = VOC Analytical identification number for a particular piece of analytical equipment.

ID.NO = VOC Analytical employee identification number of analyst.

VOC [illegible] .TICAL, GLENDALE
QC REPORT FOR 9707115
DATE PRINTED: 16 OCT 1997

AQUEOUS SAMPLES		METHOD BLANK			LAB CONTROL									MATRIX QC								
					LCS		LCSD				RPD	RPD		MS		MSD				RPD	RPD	
	UNITS	RESULT	RDL	FLG	%REC	FLG	%REC	FLG	LCL	UCL	RPD	UCL	FLG	%REC	FLG	%REC	FLG	LCL	UCL	RPD	UCL	FLG
Batch: VH*973075 Method: 8010 - Halogenated Volatile Organics																						
1,1,1-Trichloroethane	ug/L	0	1	-	105	-	-	-	61	138	-	-	-	-	-	-	-	-	-	-	-	-
1,1,2,2-Tetrachloroethane	ug/L	0.056	1	-	91	-	-	-	42	141	-	-	-	-	-	-	-	-	-	-	-	-
1,1,2-Trichloroethane	ug/L	0	1	-	101	-	-	-	57	133	-	-	-	-	-	-	-	-	-	-	-	-
1,1-Dichloroethane	ug/L	0	1	-	110	-	-	-	65	130	-	-	-	-	-	-	-	-	-	-	-	-
1,1-Dichloroethene	ug/L	0	0.5	-	109	-	-	-	54	138	-	-	-	108	-	107	-	50	147	1	27	-
1,2-Dichloroethane	ug/L	0	0.5	-	103	-	-	-	64	132	-	-	-	-	-	-	-	-	-	-	-	-
1,2-Dichlorobenzene	ug/L	0	0.5	-	100	-	-	-	64	128	-	-	-	-	-	-	-	-	-	-	-	-
1,2-Dichloropropane	ug/L	0	0.5	-	105	-	-	-	53	147	-	-	-	-	-	-	-	-	-	-	-	-
1,3-Dichlorobenzene	ug/L	0	1	-	101	-	-	-	63	130	-	-	-	-	-	-	-	-	-	-	-	-
1,4-Dichlorobenzene	ug/L	0	1	-	103	-	-	-	69	133	-	-	-	-	-	-	-	-	-	-	-	-
Bromodichloromethane	ug/L	0	0.5	-	99	-	-	-	70	130	-	-	-	-	-	-	-	-	-	-	-	-
Bromomethane	ug/L	0	1	-	97	-	-	-	39	133	-	-	-	-	-	-	-	-	-	-	-	-
Bromoform	ug/L	0	0.5	-	96	-	-	-	53	133	-	-	-	-	-	-	-	-	-	-	-	-
Chlorobenzene	ug/L	0	0.5	-	107	-	-	-	61	135	-	-	-	105	-	106	-	61	139	1	19	-
Carbon Tetrachloride	ug/L	0	1	-	107	-	-	-	64	132	-	-	-	-	-	-	-	-	-	-	-	-
Chloroethane	ug/L	0	0.5	-	87	-	-	-	46	137	-	-	-	-	-	-	-	-	-	-	-	-
Chloroform	ug/L	0	1	-	105	-	-	-	65	133	-	-	-	-	-	-	-	-	-	-	-	-
Chloromethane	ug/L	0	1	-	74	-	-	-	1	160	-	-	-	-	-	-	-	-	-	-	-	-
Dibromochloromethane	ug/L	0	0.5	-	98	-	-	-	65	127	-	-	-	-	-	-	-	-	-	-	-	-
Freon 113	ug/L	0	2	-	117	-	-	-	37	152	-	-	-	-	-	-	-	-	-	-	-	-
Methylene chloride	ug/L	0	2	-	126	-	-	-	57	137	-	-	-	-	-	-	-	-	-	-	-	-
Trichloroethene	ug/L	0	0.5	-	106	-	-	-	63	141	-	-	-	103	-	108	-	52	162	5	43	-
Trichlorofluoromethane	ug/L	0	0.5	-	118	-	-	-	42	154	-	-	-	-	-	-	-	-	-	-	-	-
Tetrachloroethene	ug/L	0	0.5	-	107	-	-	-	64	139	-	-	-	-	-	-	-	-	-	-	-	-
Vinyl chloride	ug/L	0	0.5	-	95	-	-	-	40	144	-	-	-	-	-	-	-	-	-	-	-	-
cis-1,2-Dichloroethene	ug/L	0	0.5	-	105	-	-	-	63	129	-	-	-	-	-	-	-	-	-	-	-	-
cis-1,3-Dichloropropene	ug/L	0	0.5	-	106	-	-	-	65	132	-	-	-	-	-	-	-	-	-	-	-	-
trans-1,2-Dichloroethene	ug/L	0	2	-	113	-	-	-	59	139	-	-	-	-	-	-	-	-	-	-	-	-
trans-1,3-Dichloropropene	ug/L	0	0.5	-	105	-	-	-	60	130	-	-	-	-	-	-	-	-	-	-	-	-
[Bromochloromethane]	Percent	102	-	-	97	-	-	-	69	140	-	-	-	104	-	106	-	69	140	-	-	-

VOC ANALYTICAL, GLENDALE
QC REPORT FOR 9707115
DATE PRINTED: 16 OCT 1997

AQUEOUS SAMPLES		METHOD BLANK			LAB CONTROL									MATRIX QC								
					LCS		LCSD				RPD	RPD		MS		MSD				RPD	RPD	
	UNITS	RESULT	RDL	FLG	%REC	FLG	%REC	FLG	LCL	UCL	RPD	UCL	FLG	%REC	FLG	%REC	FLG	LCL	UCL	RPD	UCL	FLG
Batch: VH*973076 Method: 8010 - Halogenated Volatile Organics																						
1,1,1-Trichloroethane	ug/L	0	1	-	109	-	-	-	61	138	-	-	-	-	-	-	-	-	-	-	-	-
1,1,2,2-Tetrachloroethane	ug/L	0.053	1	-	93	-	-	-	42	141	-	-	-	-	-	-	-	-	-	-	-	-
1,1,2-Trichloroethane	ug/L	0	1	-	101	-	-	-	57	133	-	-	-	-	-	-	-	-	-	-	-	-
1,1-Dichloroethane	ug/L	0	1	-	109	-	-	-	65	130	-	-	-	-	-	-	-	-	-	-	-	-
1,1-Dichloroethene	ug/L	0	0.5	-	109	-	-	-	54	138	-	-	-	129	-	112	-	50	147	14	27	-
1,2-Dichloroethane	ug/L	0	0.5	-	108	-	-	-	64	132	-	-	-	-	-	-	-	-	-	-	-	-
1,2-Dichlorobenzene	ug/L	0.19	0.5	-	99	-	-	-	64	128	-	-	-	-	-	-	-	-	-	-	-	-
1,2-Dichloropropane	ug/L	0	0.5	-	109	-	-	-	53	147	-	-	-	-	-	-	-	-	-	-	-	-
1,3-Dichlorobenzene	ug/L	0.23	1	-	98	-	-	-	63	130	-	-	-	-	-	-	-	-	-	-	-	-
1,4-Dichlorobenzene	ug/L	0.29	1	-	99	-	-	-	69	133	-	-	-	-	-	-	-	-	-	-	-	-
Bromodichloromethane	ug/L	0	0.5	-	107	-	-	-	70	130	-	-	-	-	-	-	-	-	-	-	-	-
Bromomethane	ug/L	0	1	-	101	-	-	-	39	133	-	-	-	-	-	-	-	-	-	-	-	-
Bromoform	ug/L	0	0.5	-	97	-	-	-	53	133	-	-	-	-	-	-	-	-	-	-	-	-
Chlorobenzene	ug/L	0	0.5	-	105	-	-	-	61	135	-	-	-	116	-	107	-	61	139	7	19	-
Carbon Tetrachloride	ug/L	0	1	-	111	-	-	-	64	132	-	-	-	-	-	-	-	-	-	-	-	-
Chloroethane	ug/L	0	0.5	-	86	-	-	-	46	137	-	-	-	-	-	-	-	-	-	-	-	-
Chloroform	ug/L	0	1	-	107	-	-	-	65	133	-	-	-	-	-	-	-	-	-	-	-	-
Chloromethane	ug/L	0	1	-	74	-	-	-	1	160	-	-	-	-	-	-	-	-	-	-	-	-
Dibromochloromethane	ug/L	0	0.5	-	96	-	-	-	65	127	-	-	-	-	-	-	-	-	-	-	-	-
Freon 113	ug/L	0	2	-	115	-	-	-	37	152	-	-	-	-	-	-	-	-	-	-	-	-
Methylene chloride	ug/L	0	2	-	125	-	-	-	57	137	-	-	-	-	-	-	-	-	-	-	-	-
Trichloroethene	ug/L	0.090	0.5	-	105	-	-	-	63	141	-	-	-	122	-	111	-	52	162	10	43	-
Trichlorofluoromethane	ug/L	0	0.5	-	121	-	-	-	42	154	-	-	-	-	-	-	-	-	-	-	-	-
Tetrachloroethene	ug/L	0.14	0.5	-	105	-	-	-	64	139	-	-	-	-	-	-	-	-	-	-	-	-
Vinyl chloride	ug/L	0	0.5	-	103	-	-	-	40	144	-	-	-	-	-	-	-	-	-	-	-	-
cis-1,2-Dichloroethene	ug/L	0	0.5	-	108	-	-	-	63	129	-	-	-	-	-	-	-	-	-	-	-	-
cis-1,3-Dichloropropene	ug/L	0	0.5	-	102	-	-	-	65	132	-	-	-	-	-	-	-	-	-	-	-	-
trans-1,2-Dichloroethene	ug/L	0	2	-	112	-	-	-	59	139	-	-	-	-	-	-	-	-	-	-	-	-
trans-1,3-Dichloropropene	ug/L	0	0.5	-	99	-	-	-	60	130	-	-	-	-	-	-	-	-	-	-	-	-
[Bromochloromethane]	Percent	107	-	-	100	-	-	-	69	140	-	-	-	97	-	104	-	69	140	-	-	-

VOC ANALYTICAL, GLENDALE
SUPPLEMENTAL QC REPORT FOR 9707115
DATE PRINTED: 16 OCT 1997

AQUEOUS SAMPLES

Batch: VH*973075 Method: 8010 - Halogenated Volatile Organics

		B707444*1	C707903*1	.....	N/A	.....	9707155*2	.....	.....	.....	.....
	UNITS	MB	LC	LT	LC	LT	R1	R2	S1	S2	T
Date Analyzed	Date	07/10/97	07/10/97	07/10/97	-	-	07/10/97	-	07/11/97	07/11/97	07/11/97
Date Confirmed	Date	07/10/97	07/10/97	07/10/97	-	-	07/10/97	-	07/11/97	07/11/97	07/11/97
Dilution Factor	Times	1	1	1	-	-	1	-	1	1	1
1,1,1-Trichloroethane	ug/L	0	52.6	50.0	-	-	3.5	-	-	-	-
1,1,2,2-Tetrachloroethane	ug/L	0.056	45.5	50.0	-	-	<0.5	-	-	-	-
1,1,2-Trichloroethane	ug/L	0	50.5	50.0	-	-	<0.5	-	-	-	-
1,1-Dichloroethane	ug/L	0	55.1	50.0	-	-	<0.5	-	-	-	-
1,1-Dichloroethene	ug/L	0	54.5	50.0	-	-	<0.5	-	53.9	53.4	50.0
1,2-Dichloroethane	ug/L	0	51.5	50.0	-	-	<0.5	-	-	-	-
1,2-Dichlorobenzene	ug/L	0	49.9	50.0	-	-	<0.5	-	-	-	-
1,2-Dichloropropane	ug/L	0	52.6	50.0	-	-	<0.5	-	-	-	-
1,3-Dichlorobenzene	ug/L	0	50.4	50.0	-	-	<0.5	-	-	-	-
1,4-Dichlorobenzene	ug/L	0	51.4	50.0	-	-	<0.5	-	-	-	-
Bromodichloromethane	ug/L	0	49.6	50.0	-	-	<0.5	-	-	-	-
Bromomethane	ug/L	0	48.7	50.0	-	-	<0.5	-	-	-	-
Bromoform	ug/L	0	47.8	50.0	-	-	<0.5	-	-	-	-
Chlorobenzene	ug/L	0	53.3	50.0	-	-	<0.5	-	52.4	53.0	50.0
Carbon Tetrachloride	ug/L	0	53.3	50.0	-	-	<0.5	-	-	-	-
Chloroethane	ug/L	0	43.7	50.0	-	-	<0.5	-	-	-	-
Chloroform	ug/L	0	52.4	50.0	-	-	<0.5	-	-	-	-
Chloromethane	ug/L	0	37.2	50.0	-	-	<0.5	-	-	-	-
Dibromochloromethane	ug/L	0	48.9	50.0	-	-	<0.5	-	-	-	-
Freon 113	ug/L	0	58.7	50.0	-	-	<0.5	-	-	-	-
Methylene chloride	ug/L	0	62.9	50.0	-	-	<2	-	-	-	-
Trichloroethene	ug/L	0	52.9	50.0	-	-	<0.5	-	51.6	54.2	50.0
Trichlorofluoromethane	ug/L	0	58.9	50.0	-	-	<0.5	-	-	-	-
Tetrachloroethene	ug/L	0	53.7	50.0	-	-	<0.5	-	-	-	-
Vinyl chloride	ug/L	0	47.4	50.0	-	-	<0.5	-	-	-	-
cis-1,2-Dichloroethene	ug/L	0	52.7	50.0	-	-	<0.5	-	-	-	-
cis-1,3-Dichloropropene	ug/L	0	53.0	50.0	-	-	<0.5	-	-	-	-
trans-1,2-Dichloroethene	ug/L	0	56.6	50.0	-	-	<0.5	-	-	-	-
trans-1,3-Dichloropropene	ug/L	0	52.3	50.0	-	-	<0.5	-	-	-	-
Bromochloromethane Reported	ug/L	50.8	48.4	50.0	-	-	53.5	-	52.0	52.8	50.0
Bromochloromethane Theoretical	ug/L	50.0	50.0	50.0	-	-	50.0	-	50.0	50.0	50.0

VOC A[illegible]ICAL, GLENDALE
SUPPLEMENTAL QC REPORT FOR 9707115
DATE PRINTED: 16 OCT 1997

AQUEOUS SAMPLES

Batch: VH*973076 Method: 8010 - Halogenated Volatile Organics

		B707539*1	C7071085*1	.....	N/A	.....	9707184*13	.....	.....	.....	.....
	UNITS	MB	LC	LT	LC	LT	R1	R2	S1	S2	T
Date Analyzed	Date	07/12/97	07/12/97	07/12/97	-	-	07/12/97	-	07/12/97	07/12/97	07/12/97
Date Confirmed	-	-	-	-	-	-	-	-	-	-	-
Dilution Factor	Times	1	1	1	-	-	1	-	1	1	1
1,1,1-Trichloroethane	ug/L	0	54.7	50.0	-	-	1.2	-	-	-	-
1,1,2,2-Tetrachloroethane	ug/L	0.053	46.3	50.0	-	-	<0.5	-	-	-	-
1,1,2-Trichloroethane	ug/L	0	50.5	50.0	-	-	<0.5	-	-	-	-
1,1-Dichloroethane	ug/L	0	54.3	50.0	-	-	<0.5	-	-	-	-
1,1-Dichloroethene	ug/L	0	54.6	50.0	-	-	<0.5	-	64.3	56.1	50.0
1,2-Dichloroethane	ug/L	0	53.8	50.0	-	-	<0.5	-	-	-	-
1,2-Dichlorobenzene	ug/L	0.19	49.5	50.0	-	-	<0.5	-	-	-	-
1,2-Dichloropropane	ug/L	0	54.5	50.0	-	-	<0.5	-	-	-	-
1,3-Dichlorobenzene	ug/L	0.23	48.9	50.0	-	-	<0.5	-	-	-	-
1,4-Dichlorobenzene	ug/L	0.29	49.7	50.0	-	-	<0.5	-	-	-	-
Bromodichloromethane	ug/L	0	53.7	50.0	-	-	1.1	-	-	-	-
Bromomethane	ug/L	0	50.6	50.0	-	-	<0.5	-	-	-	-
Bromoform	ug/L	0	48.3	50.0	-	-	2.3	-	-	-	-
Chlorobenzene	ug/L	0	52.6	50.0	-	-	<0.5	-	57.8	53.7	50.0
Carbon Tetrachloride	ug/L	0	55.4	50.0	-	-	<0.5	-	-	-	-
Chloroethane	ug/L	0	43.2	50.0	-	-	<0.5	-	-	-	-
Chloroform	ug/L	0	53.3	50.0	-	-	0.75	-	-	-	-
Chloromethane	ug/L	0	36.8	50.0	-	-	<0.5	-	-	-	-
Dibromochloromethane	ug/L	0	48.2	50.0	-	-	2.1	-	-	-	-
Freon 113	ug/L	0	57.7	50.0	-	-	<0.5	-	-	-	-
Methylene chloride	ug/L	0	62.3	50.0	-	-	<2	-	-	-	-
Trichloroethene	ug/L	0.090	52.4	50.0	-	-	<0.5	-	61.2	55.6	50.0
Trichlorofluoromethane	ug/L	0	60.5	50.0	-	-	<0.5	-	-	-	-
Tetrachloroethene	ug/L	0.14	52.7	50.0	-	-	12	-	-	-	-
Vinyl chloride	ug/L	0	51.4	50.0	-	-	<0.5	-	-	-	-
cis-1,2-Dichloroethene	ug/L	0	54.0	50.0	-	-	<0.5	-	-	-	-
cis-1,3-Dichloropropene	ug/L	0	51.2	50.0	-	-	<0.5	-	-	-	-
trans-1,2-Dichloroethene	ug/L	0	56.0	50.0	-	-	<0.5	-	-	-	-
trans-1,3-Dichloropropene	ug/L	0	49.6	50.0	-	-	<0.5	-	-	-	-
Bromochloromethane Reported	ug/L	53.4	50.1	50.0	-	-	52.5	-	48.3	52.0	50.0
Bromochloromethane Theoretical	ug/L	50.0	50.0	50.0	-	-	50.0	-	50.0	50.0	50.0

CHAIN OF CUSTODY / ANALYSES REQUEST FORM

G9707115

Project No.: 2455.01	Field Logbook No.:	Date: 7/8/97	Serial No.: Nº N-9506
Project Name: CALMUR	Project Location: City of Industry		
Sampler (Signature): [signature]			Samplers: TWT / MID

SAMPLES						ANALYSES								
SAMPLE NO.	DATE	TIME	LAB SAMPLE NO.	NO. OF CONTAINERS	SAMPLE TYPE	EPA 601	EPA 624	8010				HOLD	RUSH	REMARKS
MW4-797	7/8/97	1120	G9707115-1	2	Water			X						Results to Martin
P3-797		1130	-2					X						Harmon.
MW1-797		1210	-3					X						
P2-797		1225	-4					X						
MW7-797		14:25	-5					X						
MW6-797		1435	-6					X						
MW2-797		1538	-7					X						
P1-797		1620	-8					X						
MW3-797		1650	-9					X						
EB1-797		13:25	-11					X						
DUP-797		—	-10					X						

RELINQUISHED BY: (Signature) [signature]	DATE 7/8/97	TIME 17:55	RECEIVED BY: (Signature) [signature]	DATE 7/8/97	TIME 17:55
RELINQUISHED BY: (Signature) [signature]	DATE 7/9/97	TIME	RECEIVED BY: (Signature) A. Makijan	DATE 7/9/97	TIME 9:15
RELINQUISHED BY: (Signature) A. Makijan	DATE 7/9/97	TIME 1735	RECEIVED BY: (Signature) Sharon Malone	DATE 7/9/97	TIME 1735
METHOD OF SHIPMENT:	DATE	TIME	LAB COMMENTS:		

Sample Collector:

Levine-Fricke-Recon
1920 MAIN STREET, SUITE 750
IRVINE, CALIFORNIA 92614-7211
(714) 955-1390 FAX (714) 955-0683

Analytical Laboratory: BCA

Shipping Copy (White) Lab Copy (Green) File Copy (Yellow) Field Copy (Pink) FORM NO. 86/COC/ARF

Site Assessment Report and Remedial Action Plan
Calmar, Inc.
333 South Turnbull Canyon Road
City of Industry, California

June 12, 1997
2455.01-204

Levine·Fricke·Recon
ENGINEERS, HYDROGEOLOGISTS & APPLIED SCIENTISTS

Printed on recycled paper

Levine·Fricke·Recon
ENGINEERS, HYDROGEOLOGISTS & APPLIED SCIENTISTS

June 12, 1997 2455.01-204

Mr. Julio C. Lara
California Regional Water Quality Control Board
Los Angeles Region
101 Centre Plaza
Monterey Park, California 91754

Subject: Site Assessment Report and Remedial Action Plan, Calmar, Inc., 333 South Turnbull Canyon Road, City of Industry, California (RWQCB File No. 102.0055)

Dear Mr. Lara:

On behalf of Calmar, Inc., Levine·Fricke·Recon has prepared the following report to inform the Los Angeles Regional Water Quality Control Board of the results of recent site assessment and planned remediation activities at the Calmar facility in the City of Industry, California ("the Site").

A subsurface investigation was conducted to further assess the nature and extent of chlorinated hydrocarbons, specifically tetrachloroethene (PCE)-affected soils in the vicinity of the Site. PCE was detected at concentrations up to 160 micrograms per kilogram (μg/kg) in soils near the Calmar facility. Remedial measures consisting of soil-vapor extraction are proposed to clean up the affected soil.

The attached report includes a Remedial Action Plan for the implementation and completion of remedial activities and the performance of verification sampling. This report is submitted for your review and approval.

If you have any questions concerning the investigative activities conducted and remedial activities proposed, please contact either of the undersigned at (714) 955-1390.

Sincerely,

Martin E. Hamann, R.G., C.H.G.
Senior Project Hydrogeologist

David E. Field, R.G.
Senior Associate Hydrogeologist

Attachment

cc: Jim Jacks, Calmar, Inc.

1920 Main Street, Suite 750, Irvine, California 92614-7211 • (714) 955-1390 • *fax* (714) 955-0683
Offices Worldwide

CONTENTS

CERTIFICATION iii

1.0 INTRODUCTION 1
- 1.1 Site Description 1
- 1.2 Previous Environmental Investigations 1
- 1.3 Objectives 2

2.0 GEOLOGY AND HYDROGEOLOGY 3
- 2.1 Geology 3
- 2.2 Hydrogeology 3

3.0 RECENT FIELD INVESTIGATIONS 3

4.0 SOIL SAMPLING RESULTS 4

5.0 EXTENT OF CHLORINATED HYDROCARBON-AFFECTED SOIL 4

6.0 REMEDIAL ACTION PLAN 5
- 6.1 Soil Cleanup Level 5
- 6.2 Remedial Alternative Evaluation 6
- 6.3 Remedial Action Implementation 7
  - 6.3.1 Vapor Extraction Pilot Testing 7
  - 6.3.2 Vapor Extraction Implementation 8
- 6.4 Verification Sampling and Closure Criteria 9

7.0 RECOMMENDATIONS 10

TABLES

1 Summary of Groundwater Elevation Data

2 Summary of Soil Analytical Data
Halogenated Organic Compounds by EPA Method 8010

FIGURES

1 Site Vicinity

2 Site Plan

3 Groundwater Elevation Contours, January 17, 1997

4 Recent and Previous Soil Sampling Results

5 Extent of Chlorinated Hydrocarbons

APPENDICES

A Soil Boring Lithologic Logs and Well Construction Details

B Laboratory Analytical Results and Chain-of-Custody Documentation for Soil Samples

C Soil Cleanup Level Calculation Results

CERTIFICATION*

All hydrogeologic and geologic information, conclusions, and recommendations in this document have been prepared under the supervision of and reviewed by a Levine·Fricke·Recon California Registered Geologist.

June 12 1997

Martin E. Hamann, R.G., C.H.G.
Senior Project Hydrogeologist
California Registered Geologist #5482
California Certified Hydrogeologist #203

Date

*A registered geologist's certification of conditions comprises a declaration of his professional judgment. It does not constitute a warranty or guarantee, expressed or implied, nor does it relieve any other party of its responsibility to abide by contract documents, applicable codes, standards, regulations, and ordinances.

1.0 INTRODUCTION

Calmar, Inc., retained Levine·Fricke·Recon (LFR) to conduct soil and groundwater investigations at the Calmar facility located at 333 South Turnbull Canyon Road in the City of Industry, Los Angeles County, California ("the Site"; Figures 1 and 2). Based on previous investigations conducted by BCL Associates and Camp, Dresser & McKee, the California Regional Water Quality Control Board, Los Angeles Region (RWQCB) requested further investigation at the Site to evaluate the nature and extent of chlorinated hydrocarbons observed in the soil and groundwater.

This report summarizes the results of the site assessment and remediation activities accomplished to date. In addition, this report presents a Remedial Action Plan for the completion of remediation and the performance of verification sampling.

1.1 Site Description

The Site is developed with a large (over 100,000 square feet) manufacturing building and a parking lot (Figure 2). Calmar manufactures non-aerosol dispensing pumps that can be commonly found on hair spray bottles and other consumer products. The property contains offices, warehousing areas, assembly areas, extrusion equipment, a die shop, and mold repair areas.

The Site is located within the City of Industry. Land use in the immediate vicinity of the Site is industrial and manufacturing. The entire region surrounding the Site is part of an ongoing environmental study since regional groundwater has been affected by chlorinated hydrocarbons.

1.2 Previous Environmental Investigations

Previous investigations have shown that groundwater beneath the Site has been affected by chlorinated volatile organic compounds (VOCs). VOCs have also been detected at relatively low concentrations (less than 1 part per million [ppm]) in shallow soils at the Site.

Calmar retained BCL Associates to conduct an environmental assessment and audit of the Site in 1988. The results of BCL Associates' investigation, reported in October 1988, indicated relatively minor concentrations (less than 1 ppm) of VOCs in shallow soils and concentrations of VOCs in the groundwater at levels that exceeded California drinking water regulation concentrations. The major analytes detected in soil and groundwater samples were trichloroethene (TCE) and tetrachloroethene (PCE). Other analytes detected included 1,1-dichloroethane (1,1-DCA), 1,1-dichloroethylene (1,1-DCE), and 1,1,1-trichloroethane (1,1,1-TCA).

Camp, Dresser & McKee conducted a soil-gas survey at the Site in 1991 (reported May 1991). Elevated concentrations (≤ 820 parts per billion by volume; ppbv) of the above-mentioned analytes were detected in soil gases beneath the Site.

Camp, Dresser & McKee and LFR conducted groundwater monitoring in 1991. The results were similar to those found during BCL Associates' 1988 groundwater sampling. Camp, Dresser & McKee's monitoring results were summarized in reports dated May and July 1991, and LFR's results were summarized in a report dated November 1991.

In January 1995, LFR presented the results of an additional soil and groundwater investigation at the Site. The objective of that investigation was to assess soil and groundwater conditions beneath and hydraulically upgradient from the Site. The investigation included collection and analysis of soil, vapor, and groundwater samples in on- and off-site areas. Results of the investigation were consistent with previous findings, and confirmed that low concentrations (less than 1 ppm) of chlorinated hydrocarbons were present in soil and groundwater at the Site. Groundwater data at the Site also indicated that chlorinated hydrocarbons were present in wells upgradient from Calmar.

LFR has been monitoring groundwater at the Site on a semiannual basis, and the results of these monitoring events have been presented to the RWQCB. Groundwater monitoring at the Site over time has shown moderate concentrations of chlorinated hydrocarbons in groundwater and a decrease in chemical concentration over time. It is believed that chlorinated hydrocarbons observed in groundwater are in part due to the large number of industrial properties in the area that have contributed to the degradation of groundwater quality. This is substantiated by the occurrence of chlorinated hydrocarbons present in upgradient groundwater monitoring wells.

1.3 Objectives

Based on the results of the investigations described above, LFR further investigated the nature and extent of chlorinated hydrocarbons in soil at the Site. The primary objectives of this investigation were to delineate the lateral and vertical extent of PCE in shallow soils near the southwest corner of the manufacturing building, as well as to prepare a Remedial Action Plan for the Site. At the request of the RWQCB, a further objective was to evaluate soil conditions beneath a mold repair area in the building.

The objective of the Remedial Action Plan is to reduce PCE concentrations in shallow soils. Given the regional groundwater issues involved, groundwater is not addressed in this Remedial Action Plan.

2.0 GEOLOGY AND HYDROGEOLOGY

2.1 Geology

Soil conditions at the Site consist of alternating deposits of fine-grained and coarse-grained sediments. Generally, the top 10 to 15 feet consist of clays; below this clayey zone is a 10- to 15-foot interval of sand, below which are more clays and silts. The specific geology at the locations evaluated is presented in previous reports as well as in the boring logs from soil borings completed during this phase of the investigation (Appendix A).

2.2 Hydrogeology

Groundwater at the Site has been monitored by LFR since April 1993, and records of groundwater monitoring levels go back to 1989. Groundwater is present at the Site at approximately 25 to 27 feet below ground surface (bgs; Table 1). These water levels have historically been lower than they are currently, with the greatest depth to groundwater (approximately 40 feet bgs) occurring in 1991.

The groundwater flow direction has historically been toward the northwest under a horizontal groundwater gradient of approximately 0.01 ft/ft. Groundwater flow directions currently measured at the Site indicate a predominant flow toward the northwest. However, since early 1995, groundwater increased in monitoring well MW-3 a greater amount relative to the rise in groundwater in other wells at the Site. This increase resulted in a localized groundwater flow to the northeast in the vicinity of MW-3. The explanation for this groundwater high is not readily understood. Figure 3 presents the recent groundwater elevation contour map of the area.

3.0 RECENT FIELD INVESTIGATIONS

LFR completed additional soil borings and soil sampling to further evaluate the extent of chlorinated hydrocarbons in shallow soils in the northwest portion of the Site and to evaluate soil conditions beneath the mold repair area. The scope of work included the completion of four soil borings (LFSB5/VE1 through LFSB8/VE4) and three hand-auger borings (HA1 through HA3; Figure 2). The work was performed on April 9, 1997. Prior to the initiation of the field work, LFR prepared a work plan for approval by the RWQCB. Additionally, LFR notified the RWQCB before commencing the work. Mr. Julio Lara of the RWQCB was on site to monitor the field work.

The four soil borings were each advanced to approximately 25 feet bgs. Soil samples were collected at 2.5 feet, at 5 feet, and at 5-foot intervals thereafter. Hand-auger borings were to be completed to approximately 10 feet; however, due to refusal at each location, two hand-auger borings were completed to 4 feet beneath the building. The third hand-auger boring (HA-3) met refusal immediately beneath the building's

concrete slab. Consequently, no samples were collected from HA-3. Soil samples from the hand-auger borings were collected at 2.5 feet.

Soil samples were screened in the field for VOC concentrations using a photoionization detector. Results are presented on the soil boring logs (Appendix A). Selected soil samples were analyzed for halogenated organic compounds by EPA Method 8010 at an on-site mobile laboratory. Results of the laboratory analyses are presented in Section 4, below.

In anticipation of remedial actions that may be required at the Site, LFR installed casing in the four recently completed soil borings to function as vapor extraction/air inlet wells. Slotted casing was installed within the top 10 feet of each soil boring. The casing was installed so that it would be possible to extract chlorinated hydrocarbon vapors in the shallow clayey soil encountered within the top 10 to 15 feet of the Site. Boring logs and well construction details are included in Appendix A. Laboratory data (described below) indicated that the chlorinated hydrocarbons are more concentrated within the finer-grained (clayey) intervals at the Site. The sandier intervals observed below the clay had substantially lower concentrations of chlorinated hydrocarbons.

4.0 SOIL SAMPLING RESULTS

Selected soil samples were analyzed for chlorinated hydrocarbons using EPA Method 8010. Soil analyses were performed using a mobile laboratory provided by Jones Environmental, a state-certified laboratory. A summary of the soil analytical results is presented in Table 2 and Figure 4. Copies of the laboratory reports and chain-of-custody documents are included in Appendix B. Quality assurance/quality control (QA/QC) documentation is also included in Appendix B. Analytical results are discussed below.

Soil analytical results indicated that the chlorinated hydrocarbons TCE and PCE were detected at relatively low concentrations (less than 100 micrograms per kilogram [μg/kg, or parts per billion]) in borings LFSB6/VE2 and LFSB8/VE4. The other borings did not have detectable concentrations of chlorinated hydrocarbons at any of the depths analyzed. While two of the hand-auger borings were completed to 4 feet before encountering refusal, analytical results from the shallow samples collected indicated that there were no detectable concentrations of chlorinated hydrocarbons.

5.0 EXTENT OF CHLORINATED HYDROCARBON-AFFECTED SOIL

Based on the results of this and previous investigations, the following are conclusions regarding the nature and extent of affected soil and groundwater at the Site:

- Chlorinated hydrocarbons appear to have greatest concentration within the fine-grained (clayey) soils and are substantially lower in coarser-grained (sandy) soils.
- Chlorinated hydrocarbons, predominantly PCE and TCE, have been observed in shallow soil samples collected from the Site. Based on the RWQCB Interim Site Assessment and Cleanup Guidebook (described in Section 6.1, below), PCE, TCE, 1,1-DCE, and 1,2-DCA (collectively referred to in this report as the "target chlorinated hydrocarbons") are present in the soil at concentrations that may require remediation.

6.0 REMEDIAL ACTION PLAN

LFR has evaluated the on-site soil, soil-vapor, and groundwater data from the Site and has developed the following Remedial Action Plan to reduce the concentrations of chlorinated hydrocarbons in the subsurface of the Site. The Remedial Action Plan has been formulated to reduce concentrations of chlorinated hydrocarbons in the soil to concentrations that would not impact groundwater.

Using RWQCB guidance documents, LFR determined the levels to which chlorinated hydrocarbons should be cleaned up. Vapor extraction in the unsaturated zone will be implemented to reduce chlorinated hydrocarbon concentrations in the soil. After initial testing, and pending favorable results, LFR will implement the vapor extraction system and monitor remedial activities. During the remedial process, we will collect additional soil data as needed to verify the efficiency of chlorinated hydrocarbon reduction. Once it is shown that chlorinated hydrocarbons in soil have been reduced to the point where they are protective of groundwater, LFR will conduct a final round of soil sampling to confirm the findings. Closure of on-site soil issues will then be sought for the Site.

6.1 Soil Cleanup Level

Soil cleanup levels were calculated using the RWQCB's Interim Site Assessment and Cleanup Guidebook, dated May 1996. The attenuation factor method described in Appendix A of the Guidebook provides a method of calculating soil cleanup levels based on physical properties of the soil and properties of the specific chemical of concern. Specifically, the cleanup level is a function of the depth to groundwater, the subsurface lithology, the RWQCB-specified maximum attenuation factor for each specific VOC, and the maximum contaminant level (MCL) for each VOC.

For this site, the following input parameters were used for the calculation:

CHEMICAL	PCE	TCE	1,1-DCE	1,2-DCA
Maximum concentration in unsaturated soil*	160 μg/kg	54 μg/kg	28 μg/kg	2.2 μg/kg
Maximum Contaminant Level (MCL)	5 μg/kg	5 μg/kg	6 μg/kg	0.5 μg/kg
Attenuation Factor	729	145	95	17

* Maximum concentration in unsaturated soil is based on soil data above the groundwater table, which is currently approximately 25 feet bgs.

- Depth to groundwater of 25 feet
- Unsaturated zone soil type consisting of silty clay from 0 to 12 feet bgs and sand from 12 to 25 feet bgs

The depth to groundwater was set conservatively based on investigative activities conducted at the Site. The soil types were selected as conservative and based on the results of soil borings conducted at the Site. The MCL and maximum attenuation factor are listed in Appendix A of the RWQCB's guidebook (Table 2, p. A-8).

A spreadsheet was created to perform these cleanup level calculations for a number of depths from the surface. Resulting soil cleanup levels ranged from 5 to 108 μg/kg for PCE, from 5 to 22 μg/kg for TCE, from 6 to 18 μg/kg for 1,1-DCE, and 0.5 μg/kg for 1,2-DCA, based on the distance of the soil above groundwater. The results of the spreadsheet calculation are included in Appendix C.

6.2 Remedial Alternative Evaluation

LFR evaluated the following alternatives to arrive at a suitable remedial action that will reduce chlorinated hydrocarbon concentrations in soil to levels that will be protective of groundwater. It should be noted that only on-site soil remediation is being addressed at this time, since groundwater is being regionally addressed by various parties in the area.

No Action

It is believed that no action is not a viable remedial alternative, since PCE, TCE, 1,1-DCE, and 1,2-DCA are present in the soil at concentrations in excess of the RWQCB levels established for the protection of groundwater.

Excavation

Excavation and off-site treatment and disposal of soils that contain chlorinated hydrocarbons above RWQCB cleanup levels are neither cost effective nor practical considering the distribution of chlorinated hydrocarbons in the soil adjacent to actively used buildings and underneath active work areas.

Vapor Extraction

Vapor extraction technology represents an efficient and cost-effective method of removing VOCs such as PCE and TCE from subsurface soils. LFR's experience with vapor extraction at similar sites indicates that significant levels of chlorinated hydrocarbons could be removed from the vapor extraction wells, and that a reasonable radius of influence could be achieved. Therefore, it is believed that vapor extraction offers the most cost-effective and practical approach to remediating the soils containing chlorinated hydrocarbons, provided the fine-grained soils are sufficiently permeable in nature.

6.3 Remedial Action Implementation

Upon approval from the RWQCB, LFR will commence the initial testing and subsequent full-scale implementation of vapor extraction of chlorinated hydrocarbon-affected soil at the Site. Below are the tasks that will be completed.

6.3.1 Vapor Extraction Pilot Testing

LFR will conduct preliminary vapor extraction pilot testing using the recently completed vapor extraction wells. Pilot testing will involve applying a vacuum onto a particular vapor extraction well and measuring the vacuum response in nearby wells. One pilot vacuum test is proposed.

LFSB8/VE4 will be tested to evaluate vapor extraction potential in the shallow clayey soils that contain elevated concentrations of chlorinated hydrocarbons. Vacuum responses in LFSB4/NVP4, LFSB5/VE1, LFSB6/VE2, and LFSB7/VE3 will all be monitored during the pilot testing. Samples of the soil vapor withdrawn from LFSB8/VE4 will be collected and submitted for chlorinated hydrocarbon analysis by EPA Method TO-14.

The following data will be collected from the pilot extraction test for use in designing the soil-vapor extraction system:

- Flow rate in standard cubic feet per minute (scfm) at the vapor extraction well
- Vacuum (in inches of water) at each observation well
- Chemical concentration of extracted vapors

From the above data, the following will be calculated:

- Mass removal rates (in pounds per day) for each chemical of concern
- Radius of influence of the vacuum at various vacuum extraction rates
- Soil-vapor extraction system design indicating the number and location of soil-vapor extraction wells, air inlet wells, etc.
- Details on the type of equipment needed to remediate soils at the Site

An interim report detailing the results of the vapor extraction pilot testing will be prepared and submitted to the RWQCB for their files prior to implementation of the full-scale system.

6.3.2 Vapor Extraction Implementation

Upon favorable results from the pilot vapor extraction tests, LFR will install a vapor extraction system (VES) at the Site. While it is premature to provide specific details on the VES, our experience at similar sites indicates that a VES consisting of a 10-horsepower vacuum blower with an activated carbon-based vapor treatment system connected to an appropriate number of vapor extraction wells will be sufficient to remediate soils on the Site. The final VES layout will be included in the interim report described above. The vapor extraction equipment is designed to withdraw a flow rate of 100 scfm at vacuums up to 100 inches of water.

As part of the VES operation and monitoring, the following tasks will be performed to maintain the efficiency and track the progress of the cleanup:

- Weekly measurement of vapor extraction well flow rates and total system flow rates using an anemometer-based flow meter
- Weekly VOC concentration measurement of soil vapor from individual extraction wells and VES influent and effluent using a PID-based organic vapor analyzer
- Monthly vapor sample collection from all vapor extraction wells, and analysis of the vapor samples by EPA Method TO-14 for VOCs
- Monthly vacuum measurements at vapor monitoring wells to confirm VES capture zone
- Weekly equipment maintenance

As chlorinated hydrocarbon concentrations in the soil vapor decline, individual vapor extraction wells will be shut off to allow chlorinated hydrocarbons in the soil to equilibrate. As this occurs, the corresponding rebound in chlorinated hydrocarbon concentrations in soil vapors will be measured to determine whether continued extraction is necessary.

The vapor extraction system will be operated until no further decrease in target chlorinated hydrocarbon concentrations is observed over time in the soil gas from vapor extraction and monitoring wells, or until it is believed that the treatment system has reduced soil concentrations below the cleanup levels established in Section 6.4.

6.4 Verification Sampling and Closure Criteria

Confirmation of the remedial goals will be conducted through the analysis of both soil and soil-vapor samples. Soil samples will be collected from verification borings at the Site and analyzed for halogenated organic compounds by EPA Method 8010. The soil borings will be advanced to a depth of approximately 25 feet bgs or groundwater, and samples will be collected at 2.5-foot intervals to 10 feet, then at 5-foot intervals. Sample results will be compared to the soil cleanup levels determined using the RWQCB attenuation factor method. Specific calculations for the individual soil cleanup levels are presented in Appendix C and are summarized below:

SOIL CLEANUP LEVEL				
DEPTH ABOVE GROUNDWATER (feet)	PCE (µg/kg)	TCE (µg/kg)	1,1-DCE (µg/kg)	1,2-DCA (µg/kg)
25	108	22	18	0.5
20	73	15	12	0.5
15	38	8	7	0.5
10	19	5	6	0.5
5	10	5	6	0.5

Soil-vapor samples will be collected from vapor extraction and monitoring wells and analyzed for target chlorinated hydrocarbons and other VOCs by EPA Method TO-14 for VOCs. PCE and TCE vapor concentration data will be converted to the estimated corresponding soil concentrations using the estimation method described in the RWQCB Interim Site Assessment and Cleanup Guidebook, Appendix A.

In accordance with RWQCB guidance for VOC-impacted sites, if the targeted cleanup levels cannot be achieved in a reasonable period of time due to the nature of subsurface conditions and/or site constraints, approval of the remedial action at the Site will be requested based on the following performance criteria:

- Reduction of overall target chlorinated hydrocarbon concentrations at all extraction wells and monitoring points compared to the startup concentrations
- Verification of the presence of an "asymptotic level" of target chlorinated hydrocarbon removal from the vapor extraction wells. The "asymptotic level" of removal describes the condition in which continued vapor extraction does not result in significant reductions in target chlorinated hydrocarbon concentrations.
- Reduction in target chlorinated hydrocarbon concentrations in soil samples from fine-grained soil horizons
- Application of site-specific fate and transport modeling to show that residual concentrations do not pose a threat to groundwater

7.0 RECOMMENDATIONS

LFR recommends the approval of the above-described Remedial Action Plan by the RWQCB. Upon approval, LFR will implement the pilot vapor extraction test to evaluate the system feasibility and, pending favorable results, design the full-scale system. We estimate that the pilot vapor extraction testing can be completed within three weeks of receiving approval from the RWQCB, and the interim report presenting findings of the pilot extraction test and the system design can be prepared within four weeks following the pilot tests.

Table 1 :

SUMMARY OF GROUNDWATER ELEVATION DATA

Calmar-City of Industry

LF 2455

Well Number	Well Elevation (feet-MSL)	Date Sampled	Depth to Water (feet)	Groundwater Elevation (feet-MSL)	Relative Change (feet)
MW-1	303.32	3/29/89	35.84	267.48	--
		4/29/91	42.65	260.67	-6.81
		5/10/91	42.72	260.60	-0.07
		7/30/91	43.52	259.80	-0.80
		10/11/91	44.24	259.08	-0.72
		3/25/92	43.77	259.55	0.47
	303.16 *	4/15/93	37.01	266.15	6.60
		7/30/93	34.62	268.54	2.39
		11/30/93	32.92	270.24	1.70
		4/28/94	31.11	272.05	1.81
		7/27/94	30.89	272.27	0.22
		10/6/94	31.31	271.85	-0.42
		1/26/95	30.97	272.19	0.34
		3/28/95	29.77	273.39	1.20
		1/25/96	27.54	275.62	2.23
		7/23/96	27.67	275.49	-0.13
		1/17/97	**27.67**	**275.49**	**0.00**
MW-2	303.29	3/29/89	35.14	268.15	--
		4/29/91	41.38	261.91	-6.24
		5/10/91	41.45	261.84	-0.07
		7/30/91	42.12	261.17	-0.67
		10/11/91	42.67	260.62	-0.55
		3/25/92	42.21	261.08	0.46
	303.15 *	4/15/93	36.10	267.05	5.97
		7/30/93	33.86	269.29	2.24
		11/30/93	32.22	270.93	1.64
		4/28/94	30.42	272.73	1.80
		7/27/94	30.21	272.94	0.21
		10/6/94	30.65	272.50	-0.44
		1/26/95	30.29	272.86	0.36
		3/28/95	29.09	274.06	1.20
		1/25/96	26.77	276.38	2.32
		7/23/96	26.90	276.25	-0.13
		1/17/97	**26.84**	**276.31**	**0.06**

Table 1 :
SUMMARY OF GROUNDWATER ELEVATION DATA
Calmar-City of Industry
LF 2455

Well Number	Well Elevation (feet-MSL)	Date Sampled	Depth to Water (feet)	Groundwater Elevation (feet-MSL)	Relative Change (feet)
MW-3	302.67	3/29/89	35.01	267.66	--
		4/29/91	41.67	261.00	-6.66
		5/10/91	41.72	260.95	-0.05
		7/30/91	42.50	260.17	-0.78
		10/11/91	43.11	259.56	-0.61
		3/25/92	42.50	260.17	0.61
	302.36 *	4/15/93	35.92	266.44	6.27
		7/30/93	33.71	268.65	2.21
		11/30/93	NA	--	--
		4/28/94	30.11	272.25	3.60
		7/27/94	29.92	272.44	0.19
		10/6/94	30.34	272.02	-0.42
		1/26/95	29.46	272.90	0.88
		3/28/95	28.43	273.93	1.03
		1/25/96	26.34	276.02	2.09
		7/23/96	26.07	276.29	0.27
		1/17/97	**25.28**	**277.08**	**0.79**
MW-4	304.78	4/15/93	35.85	268.93	--
		7/30/93	33.96	270.82	1.89
		11/30/93	32.46	272.32	1.50
		4/28/94	30.76	274.02	1.70
		7/27/94	30.56	274.22	0.20
		10/6/94	31.01	273.77	-0.45
		1/26/95	30.61	274.17	0.40
		3/28/95	29.41	275.37	1.20
		1/25/96	27.42	277.36	1.99
		7/23/96	27.52	277.26	-0.10
		1/17/97	**27.45**	**277.33**	**0.07**
MW-5	304.09	4/15/93	34.09	270.00	--
		7/30/93	32.31	271.78	1.78
		11/30/93	30.9	273.19	1.41
		4/28/94	29.27	274.82	1.63
		7/27/94	29.04	275.05	0.23
		10/6/94	29.46	274.63	-0.42
		1/26/95	28.98	275.11	0.48
		3/28/95	27.8	276.29	1.18
		1/25/96	25.97	278.12	1.83
		7/23/96	26.03	278.06	-0.06
		1/17/97	**25.88**	**278.21**	**0.15**

Table 1 :
SUMMARY OF GROUNDWATER ELEVATION DATA
Calmar-City of Industry
LF 2455

Well Number	Well Elevation (feet-MSL)	Date Sampled	Depth to Water (feet)	Groundwater Elevation (feet-MSL)	Relative Change (feet)
MW-6	303.50	7/30/93	33.87	269.63	--
		11/30/93	32.37	271.13	1.50
		4/28/94	30.59	272.91	1.78
		7/27/94	30.35	273.15	0.24
		10/6/94	30.75	272.75	-0.40
		1/26/95	30.42	273.08	0.33
		3/28/95	29.21	274.29	1.21
		1/25/96	27.09	276.41	2.12
		7/23/96	27.21	276.29	-0.12
		1/17/97	**27.15**	**276.35**	**0.06**
MW-7	303.04	7/30/93	34.00	269.04	--
		11/30/93	32.24	270.80	1.76
		4/28/94	30.43	272.61	1.81
		7/27/94	30.20	272.84	0.23
		10/6/94	30.61	272.43	-0.41
		1/26/95	30.78	272.26	-0.17
		3/28/95	29.05	273.99	1.73
		1/25/96	26.90	276.14	2.15
		7/23/96	27.05	275.99	-0.15
		1/17/97	**26.97**	**276.07**	**0.08**
P-1	301.99	3/29/89	34.06	267.93	--
		4/29/91	40.59	261.40	-6.53
		5/10/91	40.66	261.33	-0.07
		7/30/91	41.40	260.59	-0.74
		10/11/91	41.95	260.04	-0.55
		3/25/92	41.16	260.83	0.79
	301.65 *	4/15/93	34.94	266.71	5.88
		7/30/93	32.76	268.89	2.18
		11/30/93	NA	--	--
		4/28/94	29.11	272.54	3.65
		7/27/94	29.04	272.61	0.07
		10/6/94	29.05	272.60	-0.01
		1/26/95	28.53	273.12	0.52
		3/28/95	27.78	273.87	0.75
		1/25/96	26.02	275.63	1.76
		7/23/96	26.11	275.54	-0.09
		1/17/97	**N/A**	**N/A**	**N/A**

Table 1 :

SUMMARY OF GROUNDWATER ELEVATION DATA

Calmar-City of Industry

LF 2455

Well Number	Well Elevation (feet-MSL)	Date Sampled	Depth to Water (feet)	Groundwater Elevation (feet-MSL)	Relative Change (feet)
P-2	303.09	3/29/89	35.14	267.95	--
		4/29/91	42.04	261.05	-6.90
		5/10/91	40.10	262.99	1.94
		7/30/91	42.82	260.27	-2.72
		10/11/91	43.43	259.66	-0.61
		3/25/92	43.01	260.08	0.42
		4/15/93	36.58	266.51	6.43
		7/30/93	34.25	268.84	2.33
		11/30/93	32.59	270.50	1.66
		4/28/94	30.78	272.31	1.81
		7/27/94	30.52	272.57	0.26
		10/6/94	30.94	272.15	-0.42
		1/26/95	30.62	272.47	0.32
		3/28/95	29.43	273.66	1.19
		1/25/96	27.18	275.91	2.25
		7/23/96	27.31	275.78	-0.13
		1/17/97	**27.30**	**275.79**	**0.01**
P-3	305.11	3/29/89	36.59	268.52	--
		4/29/91	40.59	264.52	-4.00
		5/10/91	40.68	264.43	-0.09
		7/30/91	41.86	263.25	-1.18
		10/11/91	42.07	263.04	-0.21
		3/25/92	41.21	263.90	0.86
	305.01 *	4/15/93	35.12	269.89	5.99
		7/30/93	33.96	271.05	1.16
		11/30/93	32.12	272.89	1.84
		4/28/94	30.48	274.53	1.64
		7/27/94	30.33	274.68	0.15
		10/6/94	30.76	274.25	-0.43
		1/26/95	30.04	274.97	0.72
		3/28/95	28.62	276.39	1.42
		1/25/96	26.64	278.37	1.98
		7/23/96	26.66	278.35	-0.02
		1/17/97	**26.23**	**278.78**	**0.43**

NOTES:

MSL = Mean Sea Level

* = Resurveyed after top of casing trimmed in April 1993.

NA = No access (area flooded).

QA/QC

Table 2:
Summary of Soil Analytical Data
Halogenated Organic Compounds by EPA Method 8010
Calmar Facility
333 South Turnbull Canyon Road
City of Industry, California
LFR 2455.01

Soil Boring Number	Depth (feet below ground surface)	Concentrations of Chemicals Detected* (µg/kg)
LFSB5/VE1	4.5	All ND
	10	All ND
	15	All ND
LFSB6/VE2	5	1.1 Trichloroethene
		8.3 Tetrachloroethene
	9.5	18 Tetrachloroethene
	15	1.7 Tetrachloroethene
LFSB7/VE3	5	All ND
	9.5	All ND
	15	All ND
LFSB8/VE4	5	1.7 Trichloroethene
		67 Tetrachloroethene
	9.5	1.4 Trichloroethene
		74 Tetrachloroethene
	15	2.3 Tetrachloroethene
LFHA1	2	All ND
LFHA2	2	All ND

* All soil samples were analyzed for halogenated organic compounds using EPA Method 8010. Only detected compounds are included on this table.

QA/QC

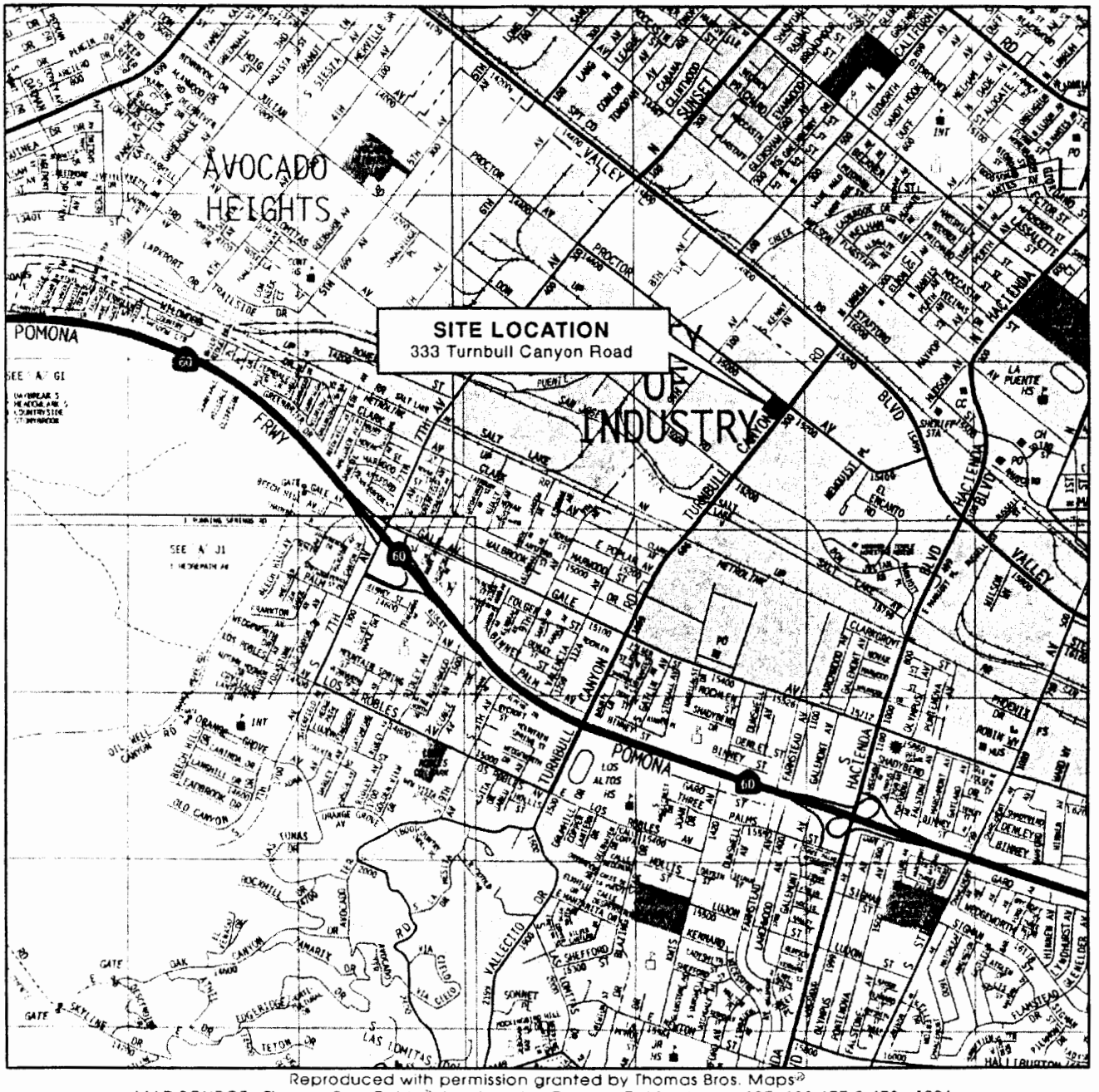

Reproduced with permission granted by Thomas Bros. Maps®
MAP SOURCE: Thomas Bros Guide®, Los Angeles County, California, pp.**637, 638,677 & 678** , 1996.

0 1/4 1/2 1 mile

Site Vicinity

Calmar

Levine•Fricke•Recon

Figure 1

Project No. 2455

2456-70 _ 112196MLH/sci

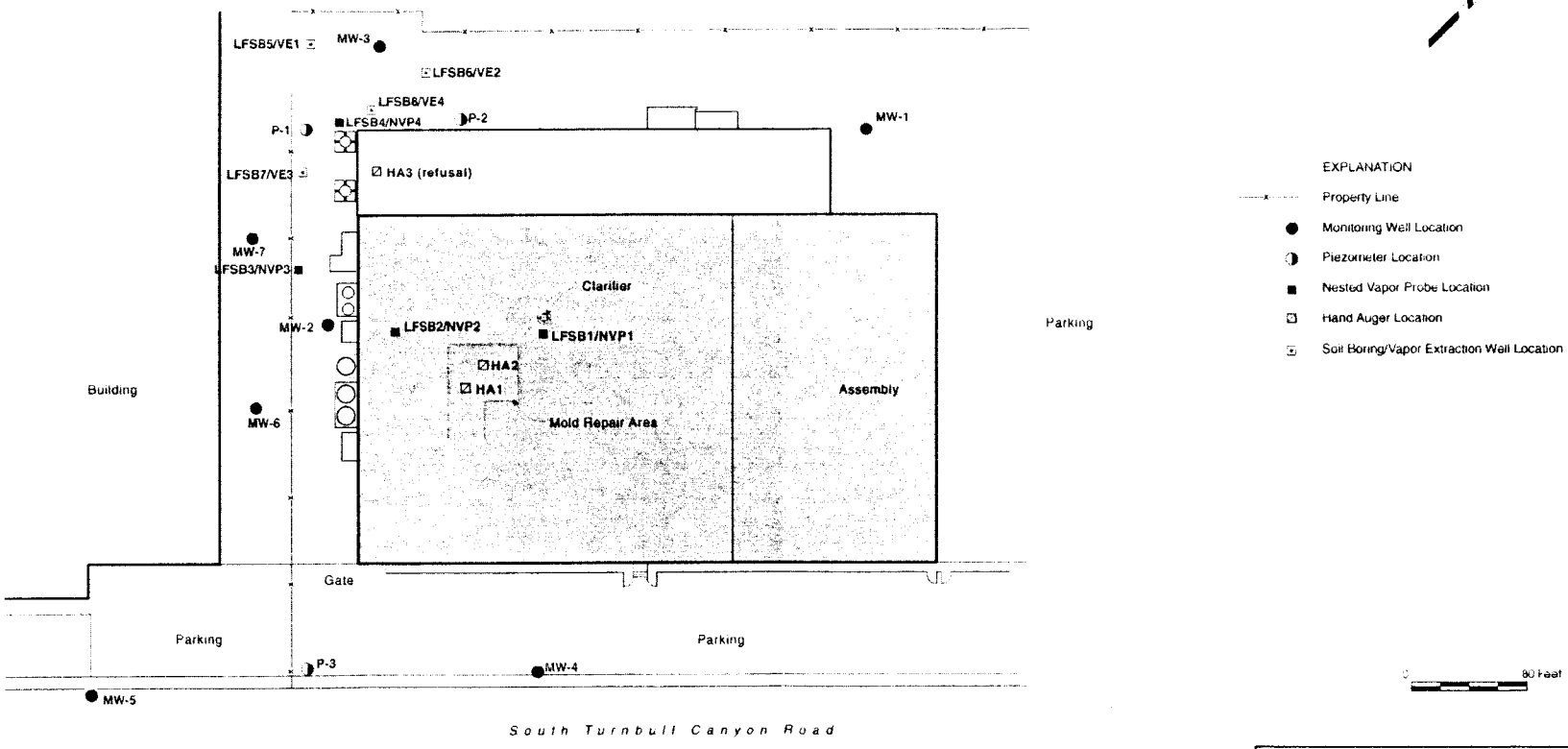

Camar

Site Plan

Levine•Fricke•Recon

Project No. 2455

Figure 2

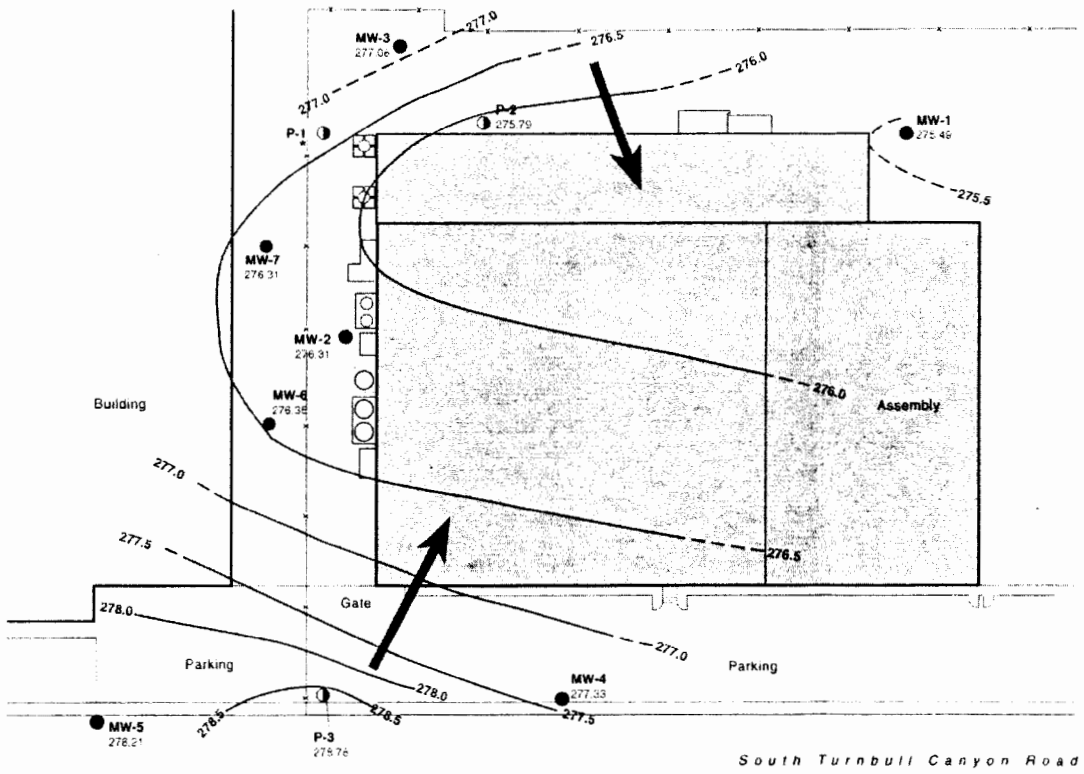

EXPLANATION

Property Line

Monitoring Well Location

Piezometer Location

Groundwater Elevation Contour (ft-MSL) Dashed Where Inferred

277.33 Groundwater Elevation Contour (ft-MSL)

Approximate Horizontal Groundwater Flow Direction

NOTE: * Water level elevations were not recorded due to flooding in vicinity of well.

0 60 Feet

Calmar

Groundwater Elevations Contours
January 17, 1997

Levine-Fricke-Recon

Project No. 2455

Figure 3

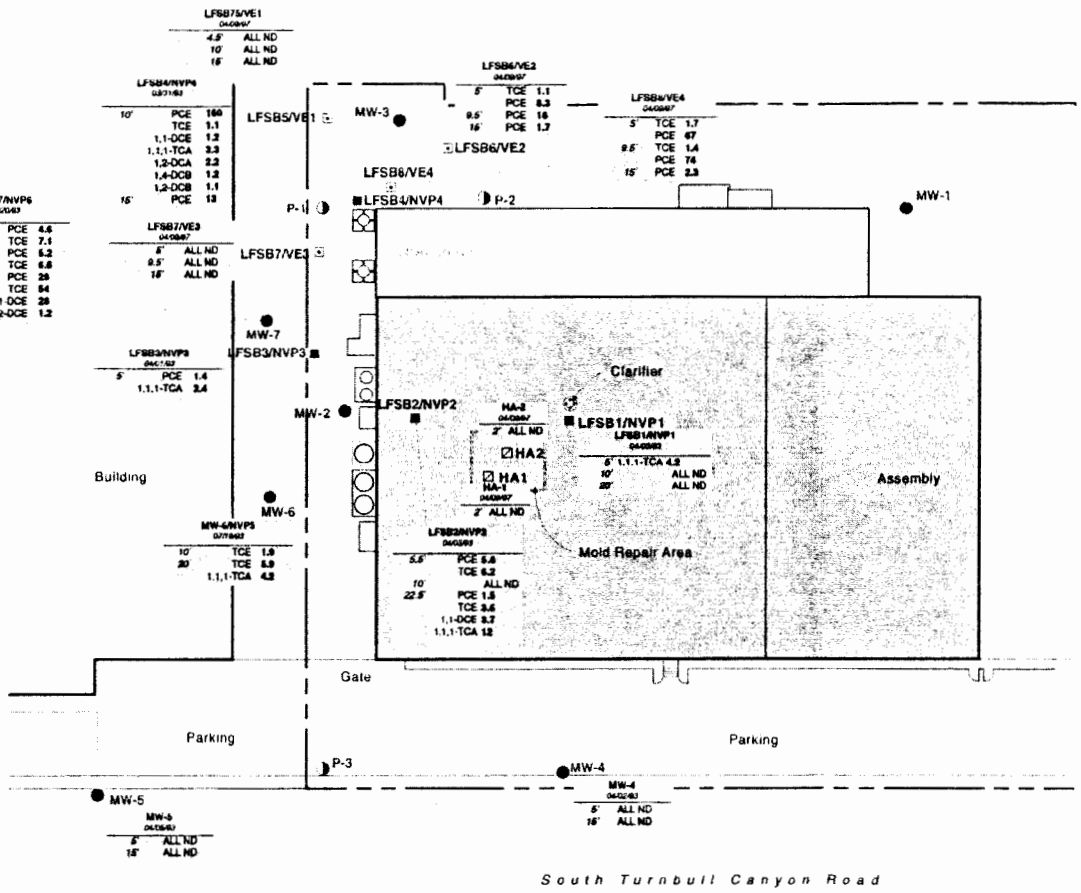

EXPLANATION

Property Line

Monitoring Well Location

Piezometer Location

Nested Vapor Probe Location

Hand Auger Location

Soil Boring/Vapor Extraction Well Location

MW-7/NVP6
5' PCE 4.6
10' PCE 160

Soil Analytical Results:
Soil Boring Number, Date Sampled,
Depth in Feet, Constituent and Concentration

PCE	Tetrachloroethene
TCE	Trichloroethene
1,1-DCE	1,1-Dichloroethene
1,1,1-TCA	1,1,1-Trichloroethane
1,2-DCA	1,2-Dichloroethane
1,4-DCB	1,4-Dichlorobenzene
1,2-DCB	1,2-Dichlorobenzene
Cis-1,2-DCE	Cis-1,2-Dichloroethene
ALL ND	All Constituents Not Detected

NOTE: All values reported in ug/kg (micrograms per kilogram).
Chemicals not listed were all not detected.
Data presented herein are of samples collected above the current groundwater table.

0 50 Feet

Caimar

Recent and Previous Soil Sampling Results

Levine-Fricke-Recon

Project No. 2455

Figure 4

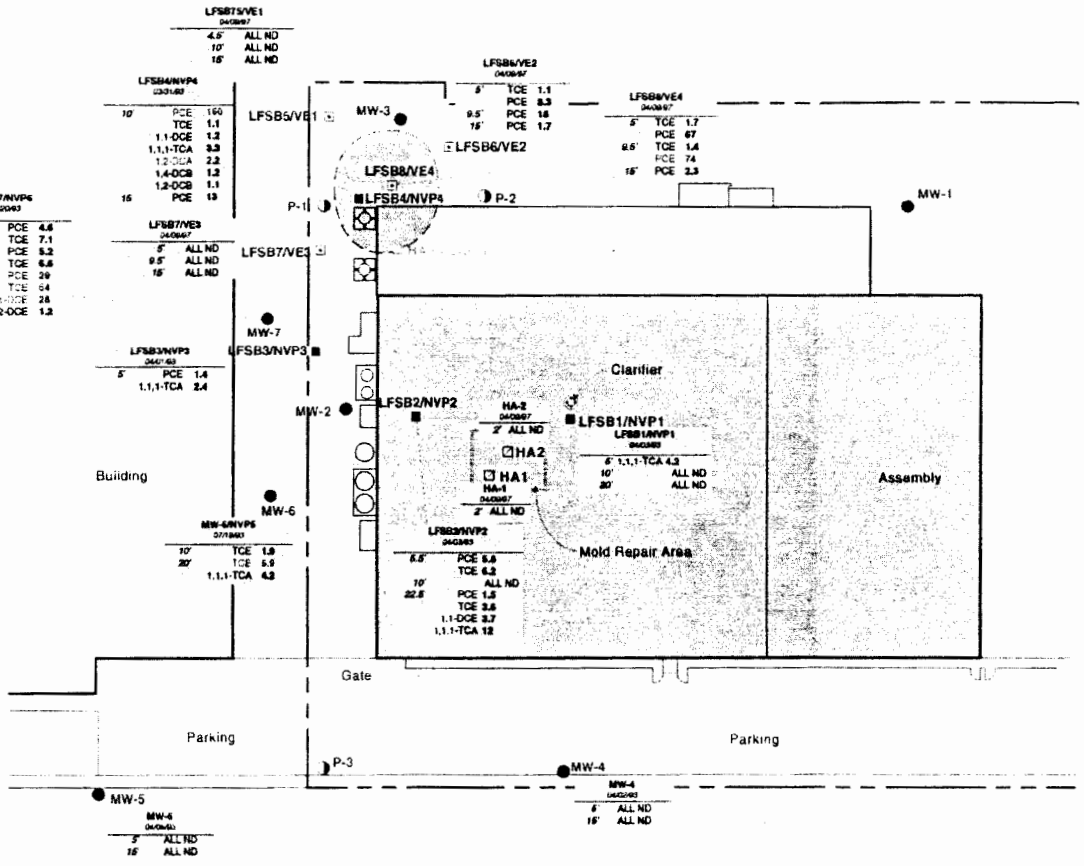

Colmar

Extent of Chlorinated Hydrocarbons

Levine-Fricke-Recon

Project No 2455

Figure 5

APPENDIX A

SOIL BORING LITHOLOGIC LOGS AND WELL CONSTRUCTION DETAILS

WELL CONSTRUCTION		LITHOLOGY	SAMPLING DATA	
Depth, feet	Graphic Log	Visual Description	ID of Samples Analyzed	PID (ppm)/ Penetration Rate (blows/ft.)
		Asphalt		
		CLAY (CL); black (7.5YR 2.5/1), moist, stiff low plasticity.		
5		--gray (7.5YR 5/1), dry to moist, low plasticity.	5 LFSB5-4.5	0/13
		--dark gray (7.5YR 4/1), with tan stringers.		
10		**SANDY CLAY (CL)**; brown (10YR 5/3), moist, very stiff, low plasticity, little fine-medium sand.	10 LFSB5-10	0/18
		CLAYEY SAND (SC); brown, (10YR 5/3), moist, moderately dense, little clay, medium plasticity.		
		SAND (SP); brown (10YR 5/3), moist, moderately dense, fine to medium sand, trace clay.		
15		--no trace clay, trace iron mottling.	15 LFSB5-15	0/13
20		**SANDY SILT (ML)**; brown, (10YR 4/4), moist, stiff, trace iron mottling.	20 LFSB5-19.5	0/10
		SILTY CLAY (CL); very dark grayish brown (10YR 3/2), wet, very stiff, medium plasticity.		
25		Total Depth = 25.5'	25 LFSB5-25	0/19

Monument Box
Well Plug
Concrete
Bentonite Pellets
2-inch diam. PVC Blank
2-inch diam. PVC 0.02 inch slot
No. 3 Lonestar sand
Bottom cap
Bentonite Grout

Well Casing Elevation:
Permit #:

Date well drilled: 04/09/97 -

L•F•R Geologist/Engineer: T. Schuhmacher

Approved by: CARG 5482

EXPLANATION

Clay
Silt
Sand
Gravel

Interval Sampled
Sample Retained

WELL CONSTRUCTION AND LITHOLOGY FOR WELL LFSB5/VE1

Levine•Fricke•Recon
Project No. 2455

Calmar

050197MEH/ts

WELL CONSTRUCTION	LITHOLOGY	SAMPLING DATA

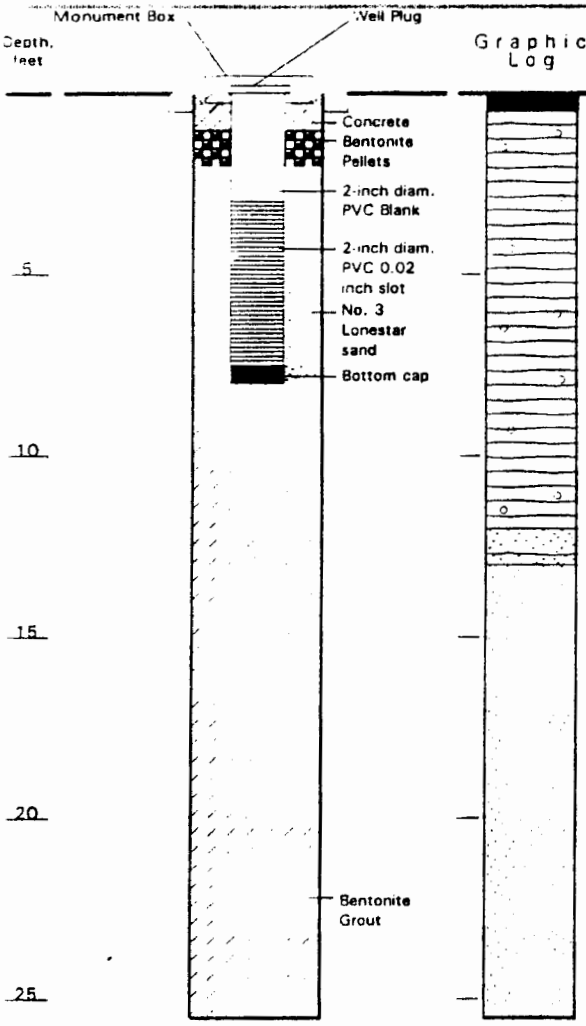

Visual Description	ID of Samples Analyzed	P I D (ppm)/ Penetration Rate (blows/ft.)
Asphalt		
1' of fill		
CLAY (CL); black, (10YR 2/1), moist, very stiff, medium plasticity.		0/21
--very dark grayish brown (10YR 3/2), moist, some tan mottling.	5 LFSB6-5	0/20
--dark brown (10YR 3/3), trace medium sand, some iron mottling.	10 LFSB6-9.5	0/17
CLAYEY SAND (SC); dark yellowish brown (10YR 4/4), fine to medium sand, trace clay.		
SAND (SP); brown (10YR 5/3), moist, moderately dense, fine sand, trace coarse sand to fine sub-rounded gravel.	15 LFSB6-15	7.7/17
--no coarse sand or fine gravel, trace silt, little iron mottling, loose.	20 LFSB6-20	9.8/33
--fine-medium sand, trace fine gravel, wet, very dense.		
--coarse sand, trace fine gravel.	25 LFSB6-25	5.5/73
Total Depth = 25.5'		

Well Casing Elevation:
Permit #:

Date well drilled: 04/09/97

L•F•R Geologist/Engineer: T. Schuhmacher

Approved by: CA RG 5482

EXPLANATION

Clay
Silt
Sand
Gravel

Interval Sampled
Sample Retained

WELL CONSTRUCTION AND LITHOLOGY FOR WELL LFSB6/VE2

Levine•Fricke•Recon
Project No. 2455

Calmar

043097MEH/lle

WELL CONSTRUCTION / LITHOLOGY / SAMPLING DATA

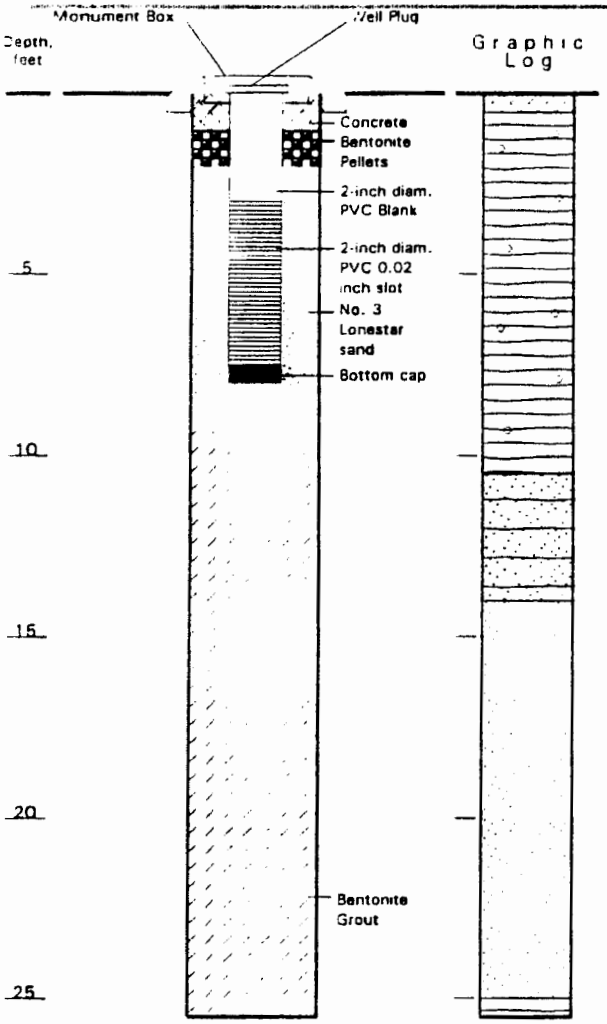

Visual Description	ID of Samples Analyzed	PID (ppm)/ Penetration Rate (blows/ft.)
Concrete		
CLAY (CL); black (10YR 2/1), moist to dry, stiff, some light gray, mottling, medium plasticity, trace medium sand.	LFSB7-2.5	NA/15
--grayish brown (10YR 5/2).		
SANDY CLAY (CL); grayish brown, (10YR 5/2), moist, stiff, little medium sand.	LFSB7-5	NA/15
--some fine-medium sand. --little fine sand. CLAY (CL); very dark grayish brown (10YR 3/2), moist, very stiff, low plasticity, trace medium sand.	LFSB7-9.5	NA/18
CLAYEY SAND (SC); dark grayish brown (2.5YR 4/2), moist, moderately dense, fine-medium sand, low plasticity, fine.		
SAND (SP); olive brown, (2.5YR 4/4), moist, moderately dense, medium sand.	LFSB7-15	4.0/20
--some iron mottling.	LFSB7-20	4.9/22
--fine sand.		
--medium sand, wet.		
CLAY (CL); black (2.5YR 2.5/1), slightly moist, stiff, moderately plastic, trace medium gray sand.	LFSB7-25	2.0/15
Total depth = 25.5'		

NA = Not Analyzed

Well Casing Elevation:
Permit #:

Date well drilled: 04/09/97 -

L•F•R Geologist/Engineer: T. Schuhmacher

Approved by: CA RG 5482

EXPLANATION

- Clay
- Silt
- Sand
- Gravel
- Interval Sampled
- Sample Retained

WELL CONSTRUCTION AND LITHOLOGY FOR WELL LFSB7/VE3

Levine•Fricke•Recon

Project No. 2455

Calmar

043097MEH/lls

WELL CONSTRUCTION / LITHOLOGY / SAMPLING DATA

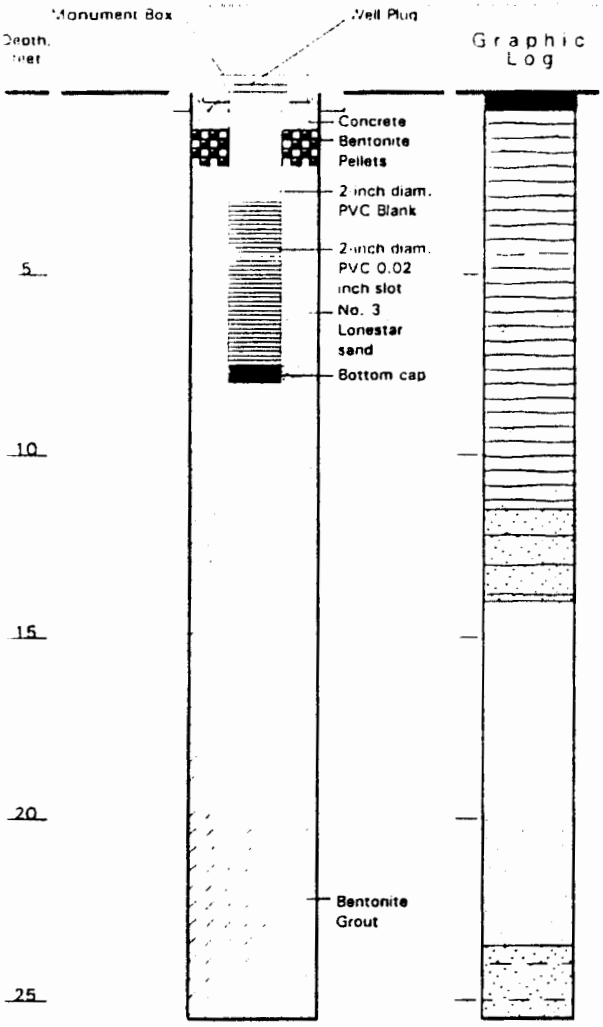

Visual Description	ID of Samples Analyzed	PID (ppm)/ Penetration Rate (blows/ft.)
Asphalt		
CLAY (CL); black (10YR 2/1), moist, very stiff, medium plasticity, fine.	LFSB8-2.5	12.4/24
--dark grayish brown (10YR 4/2), some light gray, mottling.	LFSB8-5	3.4/14
--trace fine gravel-subangular, trace fine sand.		
--little light gray mottling, trace coarse sand, no gravel.		
-- ~ 15% medium-coarse sand.	LFSB8-9.5	3.2/20
CLAYEY SAND (SC); very dark grayish brown (10YR 3/2), moist, moderately dense, fine to medium sand, trace clay.		
SAND (SP); light olive brown (2.5YR 5/4), moist, moderately dense, fine-medium sand.	LFSB8-15	3.1/24
--very fine sand.		
--trace clay, trace iron mottling.	LFSB8-20	5.1/22
SILTY SAND (SM); olive brown (2.5YR 4/3), moist to wet, moderately dense, some silt, trace iron mottling.	LFSB8-25	4.9/24
Total Depth = 25.5'		

Well Casing Elevation:
Permit #:

Date well drilled: 04/09/97 -

L•F•R Geologist/Engineer: T. Schuhmacher

Approved by: CA RG 5452

EXPLANATION

- Clay
- Silt
- Sand
- Gravel

- Interval Sampled
- Sample Retained

WELL CONSTRUCTION AND LITHOLOGY FOR WELL LFSB8/VE4

Levine•Fricke•Recon
Project No. 2455

Calmar

050197MEH/lis

Depth, feet	Graphic Log	LITHOLOGY: Visual Description	ID of Samples Analyzed	Penetration Rate (blows/ft.)	PID Values (ppm)
		Concrete			
		SAND (SP); yellowish brown (10YR 5/4), dry, fine to coarse sand, trace fine gravel-subangular, trace clay.	LFHA1-2		2.0
		Refusal at 4'			

EXPLANATION

Clay
Silt
Sand
Gravel

Interval Sampled
Sample Retained

Permit #:

Date boring drilled: 04/09/97 -

L•F R Geologist/Engineer: T. Schuhmacher

Approved by: CARG 5482

LITHOLOGY AND SAMPLE DATA FOR SOIL BORING HA1

Levine•Fricke•Recon

Project No. 2455

Calmar

050197MEH/lls

Depth, Feet	Graphic Log	LITHOLOGY: Visual Description	ID of Samples Analyzed	Penetration Rate (blows/ft.)	PID Values (ppm)
		Concrete			
		SAND (SP); dark yellowish brown (10YR 4/6), dry, fine to coarse sand, little fine gravel-subrounded	LFHA2-2		0.5
		Refusal at 4'			

EXPLANATION

Clay
Silt
Sand
Gravel

Interval Sampled
Sample Retained

Permit #:

Date boring drilled: 04/09/97 -

L•F R Geologist/Engineer: T. Schuhmacher

Approved by: CA RG 5482

LITHOLOGY AND SAMPLE DATA FOR SOIL BORING HA2

Levine•Fricke•Recon

Project No. 2455

Calmar

050197MEH/lia

APPENDIX B

LABORATORY ANALYTICAL RESULTS AND CHAIN-OF-CUSTODY DOCUMENTATION FOR SOIL SAMPLES

JONES ENVIRONMENTAL
LABORATORY RESULTS

Client:	Levine Fricke	**Report Date:**	04/10/97
Client Address:	1920 Main St. Suite 750 Irvine, CA 92714	**JEL Ref. No.:** **Client Ref. No.:**	A-2660 2455.97-01
Attn:	Richard Vogl	**Date Sampled:** **Date Received:**	04/09/97 04/09/97
Project:	Calmar	**Date Analyzed:**	04/09/97
Project Address:	City of Industry, CA	**Physical State:**	Soil

EPA 8010 - Volatile Halogenated Hydrocarbons

	Sample ID Concentration (ug/Kg)				
Parameter	LFSB5-4.5	LFSB5-10	LFSB5-15	LFSB6-5	LFSB6-9.5
Dichlorodifluoromethane	ND	ND	ND	ND	ND
Chloromethane	ND	ND	ND	ND	ND
Vinyl Chloride	ND	ND	ND	ND	ND
Bromomethane	ND	ND	ND	ND	ND
Chloroethane	ND	ND	ND	ND	ND
Trichlorofluoromethane	ND	ND	ND	ND	ND
1,1-Dichloroethylene	ND	ND	ND	ND	ND
Methylene Chloride	ND	ND	ND	ND	ND
t-1,2-Dichloroethylene	ND	ND	ND	ND	ND
1,1-Dichloroethane	ND	ND	ND	ND	ND
c-1,2-Dichloroethylene	ND	ND	ND	ND	ND
Chloroform	ND	ND	ND	ND	ND
1,1,1-Trichloroethane	ND	ND	ND	ND	ND
Carbon Tetrachloride	ND	ND	ND	ND	ND
1,2-Dichloroethane	ND	ND	ND	ND	ND
Trichloroethylene	ND	ND	ND	**1.1**	ND
1,2-Dichloropropane	ND	ND	ND	ND	ND
Bromodichloromethane	ND	ND	ND	ND	ND
c-1,3-Dichloropropylene	ND	ND	ND	ND	ND
t-1,3-Dichloropropylene	ND	ND	ND	ND	ND
1,1,2-Trichloroethane	ND	ND	ND	ND	ND
1,1,2,2-Tetrachloroethane	ND	ND	ND	ND	ND
Dibromochloromethane	ND	ND	ND	ND	ND
Chlorobenzene	ND	ND	ND	ND	ND
Tetrachloroethylene	ND	ND	ND	**8.3**	**18**
Bromoform	ND	ND	ND	ND	ND
1,3-Dichlorobenzene	ND	ND	ND	ND	ND
1,4-Dichlorobenzene	ND	ND	ND	ND	ND
1,2-Dichlorobenzene	ND	ND	ND	ND	ND
Reporting Limits:	1.0	1.0	1.0	1.0	1.0
Surrogate Recovery % #1	101	103	106	105	105
Surrogate Recovery % #2	88	95	97	94	95
Surrogate Recovery % #3	100	99	102	102	103

ND = Not Detected

JONES ENVIRONMENTAL
LABORATORY RESULTS

Client:	Levine Fricke	**Report Date:**	04/10/97
Client Address:	1920 Main St. Suite 750 Irvine, CA 92714	**JEL Ref. No.:**	A-2660
		Client Ref. No.:	2455.97-01
Attn:	Richard Vogl	**Date Sampled:**	04/09/97
		Date Received:	04/09/97
Project:	Calmar	**Date Analyzed:**	04/09/97
Project Address:	City of Industry, CA	**Physical State:**	Soil

EPA 8010 - Volatile Halogenated Hydrocarbons

	Sample ID Concentration (ug/Kg)				
Parameter	LFSB6-15	LFHA2-2	LFHA1-2	LFSB8-5	LFSB8-9.5
Dichlorodifluoromethane	ND	ND	ND	ND	ND
Chloromethane	ND	ND	ND	ND	ND
Vinyl Chloride	ND	ND	ND	ND	ND
Bromomethane	ND	ND	ND	ND	ND
Chloroethane	ND	ND	ND	ND	ND
Trichlorofluoromethane	ND	ND	ND	ND	ND
1,1-Dichloroethylene	ND	ND	ND	ND	ND
Methylene Chloride	ND	ND	ND	ND	ND
t-1,2-Dichloroethylene	ND	ND	ND	ND	ND
1,1-Dichloroethane	ND	ND	ND	ND	ND
c-1,2-Dichloroethylene	ND	ND	ND	ND	ND
Chloroform	ND	ND	ND	ND	ND
1,1,1-Trichloroethane	ND	ND	ND	ND	ND
Carbon Tetrachloride	ND	ND	ND	ND	ND
1,2-Dichloroethane	ND	ND	ND	ND	ND
Trichloroethylene	ND	ND	ND	**1.7**	**1.4**
1,2-Dichloropropane	ND	ND	ND	ND	ND
Bromodichloromethane	ND	ND	ND	ND	ND
c-1,3-Dichloropropylene	ND	ND	ND	ND	ND
t-1,3-Dichloropropylene	ND	ND	ND	ND	ND
1,1,2-Trichloroethane	ND	ND	ND	ND	ND
1,1,2,2-Tetrachloroethane	ND	ND	ND	ND	ND
Dibromochloromethane	ND	ND	ND	ND	ND
Chlorobenzene	ND	ND	ND	ND	ND
Tetrachloroethylene	**1.7**	ND	ND	**67**	**74**
Bromoform	ND	ND	ND	ND	ND
1,3-Dichlorobenzene	ND	ND	ND	ND	ND
1,4-Dichlorobenzene	ND	ND	ND	ND	ND
1,2-Dichlorobenzene	ND	ND	ND	ND	ND
Reporting Limits:	1.0	1.0	1.0	1.0	1.0
Surrogate Recovery % #1	111	105	107	107	100
Surrogate Recovery % #2	99	100	96	98	88
Surrogate Recovery % #3	104	99	107	106	92

ND = Not Detected

JONES ENVIRONMENTAL
LABORATORY RESULTS

Client:	Levine Fricke	**Report Date:**	04/10/97
Client Address:	1920 Main St. Suite 750 Irvine, CA 92714	**JEL Ref. No.:** **Client Ref. No.:**	A-2660 2455.97-01
Attn:	Richard Vogl	**Date Sampled:** **Date Received:**	04/09/97 04/09/97
Project:	Calmar	**Date Analyzed:**	04/09/97
Project Address:	City of Industry, CA	**Physical State:**	Soil

EPA 8010 - Volatile Halogenated Hydrocarbons

	Sample ID Concentration (ug/Kg)			
Parameter	LFSB8-15	LFSB7-5	LFSB7-9.5	LFSB7-15
Dichlorodifluoromethane	ND	ND	ND	ND
Chloromethane	ND	ND	ND	ND
Vinyl Chloride	ND	ND	ND	ND
Bromomethane	ND	ND	ND	ND
Chloroethane	ND	ND	ND	ND
Trichlorofluoromethane	ND	ND	ND	ND
1,1-Dichloroethylene	ND	ND	ND	ND
Methylene Chloride	ND	ND	ND	ND
t-1,2-Dichloroethylene	ND	ND	ND	ND
1,1-Dichloroethane	ND	ND	ND	ND
c-1,2-Dichloroethylene	ND	ND	ND	ND
Chloroform	ND	ND	ND	ND
1,1,1-Trichloroethane	ND	ND	ND	ND
Carbon Tetrachloride	ND	ND	ND	ND
1,2-Dichloroethane	ND	ND	ND	ND
Trichloroethylene	ND	ND	ND	ND
1,2-Dichloropropane	ND	ND	ND	ND
Bromodichloromethane	ND	ND	ND	ND
c-1,3-Dichloropropylene	ND	ND	ND	ND
t-1,3-Dichloropropylene	ND	ND	ND	ND
1,1,2-Trichloroethane	ND	ND	ND	ND
1,1,2,2-Tetrachloroethane	ND	ND	ND	ND
Dibromochloromethane	ND	ND	ND	ND
Chlorobenzene	ND	ND	ND	ND
Tetrachloroethylene	**2.3**	ND	ND	ND
Bromoform	ND	ND	ND	ND
1,3-Dichlorobenzene	ND	ND	ND	ND
1,4-Dichlorobenzene	ND	ND	ND	ND
1,2-Dichlorobenzene	ND	ND	ND	ND
Reporting Limits:	1.0	1.0	1.0	1.0
Surrogate Recovery % #1	107	111	102	113
Surrogate Recovery % #2	102	101	84	100
Surrogate Recovery % #3	101	105	105	108

ND = Not Detected

JONES ENVIRONMENTAL

QUALITY CONTROL INFORMATION

Client:	Levine Fricke	**Report Date:**	04/10/97
Client Address:	1920 Main St. Suite 750 Irvine, CA 92714	**JEL Ref. No.:**	A-2660
		Client Ref. No.:	2455.97-01
Attn:	Richard Vogl	**Date Sampled:**	04/09/97
		Date Received:	04/09/97
Project:	Calmar	**Date Analyzed:**	04/09/97
Project Address:	City of Industry, CA	**Physical State:**	Soil

---

EPA 8010 - Volatile Halogenated Hydrocarbons

Sample Spiked: LFSB7-15

Parameter	MS Recovery	MSD Recovery	RPD	Acceptability Range (%)
1,1-DCE	112%	115%	3.1%	60 - 140
TCE	97%	100%	2.8%	60 - 140
CLBZ	94%	96%	1.7%	60 - 140

Method Blank = Not Detected

MS = Matrix Spike
MSD = Matrix Spike Duplicate
RPD = Relative Percent Difference

APPENDIX C

SOIL CLEANUP LEVEL CALCULATION RESULTS

VOC Cleanup Level Calculation
LARWQCB Interim Site Assessment and Cleanup Guidebook. May 1996
Attenuation Factor Method. Appendix A

Site Address: **333 Turnbull Canyon Road, Industry, CA**
Project Number: **2455.01-202**

Site Specific Data

Depth to GW:	**25**	feet
VOC:	**PCE**	
MCL/PRG:	**5**	µg/L. California maximum contaminant level from CCR Title 22
Maximum AF:	**729**	from LARWQCB Guidebook. Appendix A. page A-8. Table 2

Conceptual Model of Lithology

Layer	depth from surface	depth to GW	% gravel	% sand	%silt	% clay		Notes
Layer 1: Top	**0**	25	**0%**	**0%**	**30%**	**70%**		
Layer 1: Bottom	**12**	13						
Layer 2: Top	**12**	13	**0%**	**80%**	**10%**	**10%**		
Layer 2: Bottom	**25**	0						
Layer 3: Top		na	**0%**	**0%**	**0%**	**0%**		
Layer 3: Bottom		na						
Layer 4: Top		na	**0%**	**0%**	**0%**	**0%**		
Layer 4: Bottom		na						

Depth from Surface (feet)	Distance to Ground Water (feet)	AFd Depth Mod. Atten. Factor	TGR gravel	TSA sand	TSI silt	TCL clay	AFt Total Atten. Factor	**Soil Cleanup Level (µg/kg)**
			Interval Thickness (feet)					
0	25	45.94	0	10.4	4.9	9.7	21.54	**108**
5	20	36.95	0	10.4	3.4	6.2	14.63	**73**
10	15	27.96	0	10.4	1.9	2.7	7.68	**38**
15	10	18.98	0	8	1	1	3.80	**19**
20	5	9.99	0	4	0.5	0.5	2.00	**10**

VOC Cleanup Level Calculation
LARWQCB Interim Site Assessment and Cleanup Guidebook. May 1996
Attenuation Factor Method, Appendix A

Site Address: **333 Turnbull Canyon Road, Industry, CA**
Project Number: **2455.01-202**

Site Specific Data

Depth to GW:	**25**	feet
VOC:	**TCE**	
MCL/PRG:	**5**	µg/L, California maximum contaminant level from CCR Title 22
Maximum AF:	**145**	from LARWQCB Guidebook, Appendix A, page A-8, Table 2

Conceptual Model of Lithology

Layer	depth from surface	depth to GW	% gravel	% sand	%silt	% clay		Notes
Layer 1: Top	**0**	25	**0%**	**0%**	**30%**	**70%**		
Layer 1: Bottom	**12**	13						
Layer 2: Top	**12**	13	**0%**	**80%**	**10%**	**10%**		
Layer 2: Bottom	**25**	0						
Layer 3: Top		na	**0%**	**0%**	**0%**	**0%**		
Layer 3: Bottom		na						
Layer 4: Top		na	**0%**	**0%**	**0%**	**0%**		
Layer 4: Bottom		na						

Depth from Surface (feet)	Distance to Ground Water (feet)	AFd Depth Mod. Atten. Factor	TGR gravel	TSA sand	TSI silt	TCL clay	AFt Total Atten. Factor	**Soil Cleanup Level (µg/kg)**
			Interval Thickness (feet)					
0	25	9.44	0	10.4	4.9	9.7	4.42	**22**
5	20	7.75	0	10.4	3.4	6.2	3.07	**15**
10	15	6.06	0	10.4	1.9	2.7	1.67	**8**
15	10	4.38	0	8	1	1	1.00	**5**
20	5	2.69	0	4	0.5	0.5	1.00	**5**

VOC Cleanup Level Calculation
LARWQCB Interim Site Assessment and Cleanup Guidebook. May 1996
Attenuation Factor Method. Appendix A

Site Address: **333 Turnbull Canyon Road, Industry, CA**
Project Number: **2455.01-202**

Site Specific Data

Depth to GW:	**25**	feet
VOC:	**1,1-DCE**	
MCL/PRG:	**6**	µg/L. California maximum contaminant level from CCR Title 22
Maximum AF:	**95**	from LARWQCB Guidebook. Appendix A. page A-8. Table 2

Conceptual Model of Lithology

Layer	depth from surface	depth to GW	% gravel	% sand	%silt	% clay		Notes
Layer 1: Top	**0**	25	**0%**	**0%**	**30%**	**70%**		
Layer 1: Bottom	**12**	13						
Layer 2: Top	**12**	13	**0%**	**80%**	**10%**	**10%**		
Layer 2: Bottom	**25**	0						
Layer 3: Top		na	**0%**	**0%**	**0%**	**0%**		
Layer 3: Bottom		na						
Layer 4: Top		na	**0%**	**0%**	**0%**	**0%**		
Layer 4: Bottom		na						

Depth from Surface (feet)	Distance to Ground Water (feet)	AFd Depth Mod. Atten. Factor	TGR gravel	TSA sand	TSI silt	TCL clay	AFt Total Atten. Factor	**Soil Cleanup Level (µg/kg)**
			Interval Thickness (feet)					
0	25	6.31	0	10.4	4.9	9.7	2.96	**18**
5	20	5.25	0	10.4	3.4	6.2	2.08	**12**
10	15	4.19	0	10.4	1.9	2.7	1.15	**7**
15	10	3.13	0	8	1	1	1.00	**6**
20	5	2.06	0	4	0.5	0.5	1.00	**6**

VOC Cleanup Level Calculation
LARWQCB Interim Site Assessment and Cleanup Guidebook, May 1996
Attenuation Factor Method, Appendix A

Site Address: **333 Turnbull Canyon Road, Industry, CA**
Project Number: **2455.01-202**

Site Specific Data

Depth to GW:	**25**	feet
VOC:	**1,2-DCA**	
MCL/PRG:	**0.5**	µg/L, California maximum contaminant level from CCR Title 22
Maximum AF:	**17**	from LARWQCB Guidebook, Appendix A, page A-8, Table 2

Conceptual Model of Lithology

Layer	depth from surface	depth to GW	% gravel	% sand	%silt	% clay		Notes
Layer 1: Top	**0**	25	**0%**	**0%**	**30%**	**70%**		
Layer 1: Bottom	**12**	13						
Layer 2: Top	**12**	13	**0%**	**80%**	**10%**	**10%**		
Layer 2: Bottom	**25**	0						
Layer 3: Top		na	**0%**	**0%**	**0%**	**0%**		
Layer 3: Bottom		na						
Layer 4: Top		na	**0%**	**0%**	**0%**	**0%**		
Layer 4: Bottom		na						

Depth from Surface (feet)	Distance to Ground Water (feet)	AFd Depth Mod. Atten. Factor	TGR gravel	TSA sand	TSI silt	TCL clay	AFt Total Atten. Factor	**Soil Cleanup Level (µg/kg)**
			Interval Thickness (feet)					
0	25	1.44	0	10.4	4.9	9.7	1.00	**0.5**
5	20	1.35	0	10.4	3.4	6.2	1.00	**0.5**
10	15	1.26	0	10.4	1.9	2.7	1.00	**0.5**
15	10	1.18	0	8	1	1	1.00	**0.5**
20	5	1.09	0	4	0.5	0.5	1.00	**0.5**